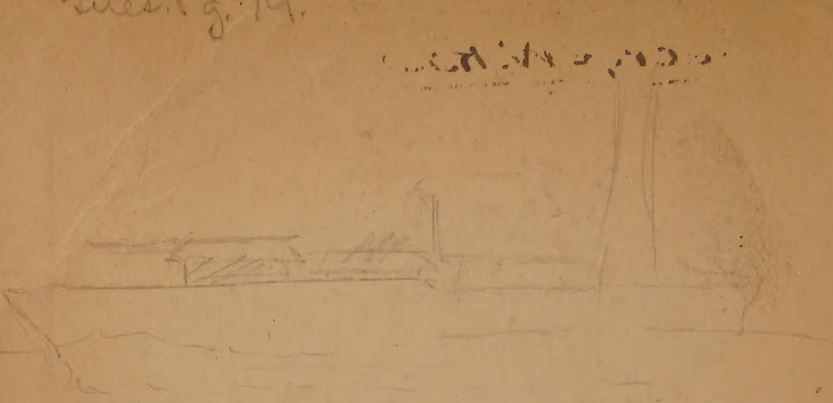

George W. Rocklein Jr.

Elements of Mechanism

PETER SCHWAMB, S.B.
Professor of Machine Design (Retired), Massachusetts Institute of Technology

ALLYNE L. MERRILL, S.B.
Professor of Mechanism, Massachusetts Institute of Technology

WALTER H. JAMES, S.B.
Associate Professor in the Department of Mechanical Engineering, Massachusetts Institute of Technology

THIRD EDITION, REWRITTEN, ENLARGED, AND RESET
TOTAL ISSUE FORTY-SIX THOUSAND

NEW YORK
JOHN WILEY & SONS, INC.
LONDON: CHAPMAN & HALL, LIMITED

COPYRIGHT, 1904, 1905,
BY
PETER SCHWAMB
AND
ALLYNE L. MERRILL

COPYRIGHT, 1921,
BY
PETER SCHWAMB
ALLYNE L. MERRILL
WALTER H. JAMES

10–24

PREFACE TO THE THIRD EDITION

This revised edition embodies many changes suggested by instructors who have used the second edition during the last sixteen years. The authors acknowledge their indebtedness to all of these gentlemen, and especially to Prof. George W. Swett, who has read a large part of the manuscript and given much valuable criticism.

Professor Walter H. James, in charge of the instruction in Mechanical Engineering Drawing and Machine Drawing at the Massachusetts Institute of Technology, and also an Instructor in Mechanism for many years, has been in charge of the revision, and joins in the authorship of the book.

PETER SCHWAMB.
ALLYNE L. MERRILL.
WALTER H. JAMES.

CAMBRIDGE, MASS.,
December, 1920

PREFACE TO SECOND EDITION

The main subject-matter of this work was written during 1885 by Peter Schwamb and has been used since then, in the form of printed notes, at the Massachusetts Institute of Technology, as a basis for instruction in mechanism, being followed by a study of the mechanism of machine tools and of cotton machinery. The notes were written because a suitable text-book could not be found which would enable the required instruction to be given in the time available. They have accomplished the desired result, and numerous inquiries have been received for copies from various institutions and individuals desiring to use them as text-books. This outside demand, coupled with a desire to revise the notes, making such changes and additions as experience has proved advisable, is the reason for publishing at this time.

Very little claim is made as to originality of the subject-matter which has been so fully covered by previous writers. Such available matter has been used as appeared best to accomplish the object desired. Claim for consideration rests largely on the manner of presenting the subject, which we have endeavored to make systematic, clear, and practical.

Among the works consulted and to which we are indebted for suggestions and illustrations are the following: "Kinematics of Machinery," and "Der Konstrukteur," by F. Reuleaux, the former for the discussion of linkages, and the latter for various illustrations of mechanisms; "Principles of Mechanism," by S. W. Robinson, for the discussion of non-circular wheels; "Kinematics," by C. W. MacCord, for the discussion of annular wheels and screw-gearing; "Machinery and Millwork," by Rankine; "Elements of Mechanism," by T. M. Goodeve; and "Elements of Machine Design," by W. C. Unwin.

PETER SCHWAMB.
ALLYNE L. MERRILL.

October 20, 1904

CONTENTS

PAGE

CHAPTER I

INTRODUCTION 1

CHAPTER II

REVOLVING AND OSCILLATING BODIES 12

CHAPTER III

BELT, ROPES AND CHAINS 21

CHAPTER IV

TRANSMISSION OF MOTION BY BODIES IN PURE ROLLING CONTACT 63

CHAPTER V

GEARS AND GEAR TEETH 86

CHAPTER VI

WHEELS IN TRAINS 153

CHAPTER VII

EPICYCLIC GEAR TRAINS 166

CHAPTER VIII

INCLINED PLANE, WEDGE, SCREW, WORM AND WHEEL 180

CHAPTER IX

CAMS 197

CHAPTER X

FOUR-BAR LINKAGE. RELATIVE VELOCITIES OF RIGIDLY CONNECTED POINTS 221

CHAPTER XI

LINKWORK 244

CHAPTER XII

STRAIGHT-LINE MECHANISMS — PARALLEL MOTIONS 291

CHAPTER XIII

MISCELLANEOUS MECHANISMS — AGGREGATE COMBINATIONS — PULLEY BLOCKS — INTERMITTENT MOTION 306

PROBLEMS 336

INDEX 367

Elements of Mechanism

CHAPTER I

INTRODUCTION

1. A Machine is a combination of resistant bodies so arranged that by their means the mechanical forces of nature can be compelled to produce some effect or work accompanied with certain determinate motions.* In general, it may be properly said that a machine is an assemblage of parts interposed between the source of power and the work, for the purpose of adapting the one to the other. Each of the pieces in a machine either moves or helps to guide some of the other pieces in their motion.

No machine can move itself, nor can it create motive power; this must be derived from external sources, such as the force of gravitation, the uncoiling of a spring, or the expansion of steam. As an example of a machine commonly met with, an engine might be mentioned. It is able to do certain definite work, provided some external force shall act upon it, setting the working parts in motion. It consists of a fixed frame, supporting the moving parts, some of which cause the rotation of the engine shaft, others move the valves distributing the steam to the cylinder, and still others operate the governor which controls the engine. These moving parts are so arranged that they make certain definite motions relative to each other when an external force, as steam pressure, is applied to the piston.

2. A Mechanism is a portion of a machine where two or more pieces are combined, so that the motion of the first compels the motion of the others, according to a law depending on the nature of the combination. For example the combination of a crank and connecting-rod with guides and frame, in a steam engine, serving to convert reciprocating into circular motion, would thus be called a mechanism.

The term *Elementary Combination* is sometimes used synonymously with *A Mechanism.*

A machine is made up of a series or train of mechanisms.

* Reuleaux: Kinematics of Machinery.

3. The Science of Mechanism treats of the forms of the pieces used in the construction of machinery and the laws which govern the motions and forces existing in or transmitted by them.

The operation of any machine depends upon two things: first, the transmission of certain forces, and second, the production of determinate motions. In designing, due consideration must be given to both of these, so that each part may be adapted to bear the stresses imposed on it, as well as have the proper motion relative to the other parts of the machine. The nature of the movements does not depend upon the strength or absolute dimensions of the moving parts, as can be shown by models whose dimensions may vary much from those requisite for strength, and yet the motions of the parts will be the same as those of the machine. Therefore, the force and the motion may be considered separately, thus dividing the science of Mechanism into two parts, viz.:

1° **Pure Mechanism,** which treats of the motion and forms of the parts of a machine, and the manner of supporting and guiding them, independent of their strength.

2° **Constructive Mechanism,** which involves the calculation of the forces acting on different parts of the machine; the selection of materials as to strength and durability in order to withstand these forces, taking into account the convenience for repairs, and facilities for manufacture.

What follows, will, in general, be confined to the first part, pure mechanism, or what is sometimes called "the geometry of machinery"; but in some cases the forces in action will be considered.

The definition of a machine might be modified to accord with the above, as follows:

A Machine is an assemblage of moving parts so connected that when the first, or recipient, has a certain motion, the parts where the work is done, or effect produced, will have certain other definite motions.

4. Driver and Follower. That piece of a mechanism which is supposed to cause motion is called the **driver,** and the one whose motion is effected is called the **follower.**

5. Frame. The frame of a machine is a structure that supports the moving parts and regulates the path, or kind of motion, of many of them directly. In discussing the motions of the moving parts, it is convenient to refer them to the frame, even though it may have, as in the locomotive, a motion of its own.

6. Modes of Transmission. If the action of natural forces of attraction and repulsion is not considered, one piece cannot move

another, unless the two are in contact or are connected to each other by some intervening body that is capable of communicating the motion of the one to the other. In the latter case, the motion of the connector is usually unimportant, as the action of the combination as a whole depends upon the relative motion of the connected pieces.

Thus motion can be transmitted from driver to follower:

1° By direct contact.
2° By intermediate connectors.

7. Links and Bands. An intermediate connector can be rigid or flexible. When rigid it is called a **link,** and it can either push or pull, such as the connecting-rod of a steam engine. Pivots or other joints are necessary to connect the link to the driver and follower.

If the connector is flexible, it is called a **band,** which is supposed to be inextensible, and only capable of transmitting a pull. A fluid confined in a suitable receptacle may also serve as a connector, as in the hydraulic press. The fluid might be called a pressure-organ in distinction from the band, which is a tension-organ.

8. Motion is change of position. Motion and rest are necessarily relative terms within the limits of our knowledge. We may conceive a body as fixed in space, but we cannot know that there is one so fixed. If two bodies, both moving in space, remain in the same position relative to each other, they are said to be at rest, one relatively to the other; if they do not, either may be said to be in motion relatively to the other.

Motion may thus be either *relative,* or it may be *absolute,* provided some point is assumed as fixed. In what follows, the earth will be assumed to be at rest, and all motions referred to it will be considered as absolute.

9. Path. A point moving in space describes a line called its **path,** which may be *rectilinear* or *curvilinear.* The motion of a body is determined by the paths of three of its points not on a straight line. If the motion is in a plane, two points suffice, and if rectilinear, one point suffices to determine the motion.

10. Direction. If a point is moving along a straight path the direction of its motion is along the line which constitutes its path; motion towards one end of the line being assumed as having positive direction and indicated by a + sign, the motion toward the other end would be negative and indicated by a − sign. If a point is moving along a curved path, the direction at any instant is along the tangent to the curve and may be indicated as positive or negative, as in the case of rectilinear motion.

11. Continuous Motion. When a point continues to move indefinitely in a given path in the same direction, its motion is said to be **continuous.** In this case the path must return on itself, as a circle or other closed curve. A wheel turning on its bearings affords an example of this motion.

12. Reciprocating Motion. When a point traverses the same path and reverses its motion at the ends of such path, the motion is said to be **reciprocating.**

13. Vibration and Oscillation are terms applied to reciprocating circular motion, as that of a pendulum.

14. Intermittent Motion. When the motion of a point is interrupted by periods of rest, its motion is said to be **intermittent.**

15. Revolution and Rotation. A point is said to **revolve** about an axis when it describes a circle of which the center is in, and the plane is perpendicular to, that axis. When all the points of a body thus move, the body is said to revolve about the axis. If this axis passes through the body, as in the case of a wheel, the word **rotation** is used synonymously with revolution. The word **turn** is often used synonymously with revolution and rotation. It frequently occurs that a body not only rotates about an axis passing through itself, but also moves in an orbit about another axis.

16. An Axis of Rotation or revolution is a line whose direction is not changed by the rotation; a *fixed axis* is one whose position, as well as its direction, remains unchanged.

17. A Plane of Rotation or revolution is a plane perpendicular to the axis of rotation or revolution.

18. Direction of Rotation or revolution is defined by giving the direction of the axis and stating whether the turning is **Right-handed** (clockwise) or **Left-handed** (anti-clockwise).

19. Cycle of Motions. When a mechanism is set in motion and its parts go through a series of movements which are repeated over and over, the relations between and order of the different divisions of the series being the same for each repetition, one of these series is called a **cycle of motions.** For example, one revolution of the crank of a steam engine causes a series of different positions of the piston-rod, and this series of positions is repeated over and over for each revolution of the crank.

20. Period of motion is the time occupied in completing one cycle.

21. Linear Speed is the rate of motion of a point along its path, or the rate at which a point is approaching or receding from another point in its path. If the point to which the motion of the moving point is referred, is fixed, the speed is the *absolute* speed of the point.

If the reference point is itself in motion the speed of the point in question is *relative*. Linear speed is expressed in linear units, per unit of time.

22. Angular Speed is the rate of turning of a body about an axis, or the rate at which a line on a revolving body is changing direction, and is expressed in angular units per unit of time.

In case a body is revolving about an axis outside of itself, any point in the body has only linear speed, but a line, real or imaginary, joining the point to the axis of revolution has angular speed, also a line joining any two points on the body has angular speed.

23. Uniform and Variable Speed. Speed is **uniform** when equal spaces are passed over in equal times, however small the intervals into which the time is divided. The speed in this case is the space passed over in a unit of time, and if s represent the space passed over in the time t, the speed v will be

$$v = \frac{s}{t}. \tag{1}$$

Speed is **variable** when unequal spaces are passed over in equal intervals of time, increasing spaces giving accelerated motion and decreasing spaces giving retarded motion. The speed, when variable, is the limit of the space passed over in a small interval of time, divided by the time, when these intervals of time become infinitely small. If s represents the space passed over in the time t, then

$$v = \text{limit of } \frac{\Delta s}{\Delta t} \text{ as } \Delta t \text{ approaches zero,}$$

or

$$v = \frac{ds}{dt}. \tag{2}$$

The uniform speed of a point or line is measured by the number of units of distance passed over in a unit of time, as feet per minute, radians per second, etc. When the speed is variable it is measured by the distance which would be passed over in a unit of time, if the point or line retained throughout that time the speed which it had at the instant considered.

24. Velocity is a word often used synonymously with speed, although, accurately speaking, velocity includes *direction* as well as *speed*. The linear velocity of a point is not fully defined unless the direction in which it is moving and the rate at which it is moving are both known. The angular velocity of a line would be defined by giving its angular speed and the direction of the perpendicular to the plane in which the line is turning.

25. Linear Acceleration is the rate of change of linear velocity. Since velocity involves direction as well as rate of motion, linear

acceleration may involve a change in speed or direction, or both. Any change in the speed takes place in a direction tangent to the path of the point and is called **tangential acceleration,** while a change in direction takes place normal to the path and is called **normal acceleration.** This must never be confused with angular acceleration which will be discussed later. In general in this text only tangential acceleration will be considered and it will be understood that when the word acceleration is used in connection with linear motion it is intended to refer to the tangential acceleration unless normal acceleration is definitely mentioned. The following example will make clear the meaning of terms in which tangential acceleration is expressed:

If a body is moving at the rate of 1 ft. per second at the end of the first second, 3 ft. per second at the end of the second second, 5 ft. per second at the end of the third second, etc., the speed is increasing at the rate of 2 ft. per second each second. Its acceleration is two feet per second each second.

Acceleration may be either *positive* or *negative.* If the speed is increasing the acceleration is positive; if the speed is decreasing the acceleration is negative. If the speed changes the same amount each second the acceleration is uniform, but if the speed changes by different amounts at different times the acceleration is variable. If Δv represents the change in speed in the time Δt, then, if the acceleration a is uniform

$$a = \frac{\Delta v}{\Delta t}. \tag{3}$$

When the acceleration is variable

$$a = \text{limit of } \frac{\Delta v}{\Delta t} \text{ as } \Delta t \text{ approaches zero}$$

or

$$a = \frac{dv}{dt}. \tag{4}$$

26. Angular Acceleration is rate of change of angular velocity. In this case, as in the case of linear acceleration, a change in either speed or direction of rotation, or both, may be involved. For example, if a line is turning in a plane with a varying angular speed it has angular acceleration which may be positive or negative; or if the direction of the plane of rotation is changing the line also has angular acceleration. Unless otherwise stated angular acceleration in this text will be understood to refer to change in angular speed. Angular acceleration is expressed in angular units change in speed per unit time (such as radians, degrees, or revolutions per minute each minute). Equations (3) and (4) will apply to angular acceleration if a and v are expressed in angular units.

27. Kinds of Motion. From the preceding discussion it is evident that motion, whether absolute or relative, may be classified as follows:

Uniform motion — Acceleration zero.

Variable motion
- Acceleration constant
- Acceleration variable
- Acceleration constant part of the time and variable part of the time.

A body having uniform motion travels without change of speed, if any normal acceleration is neglected. For example, if a block is sliding on guides a distance of one inch each second, or a wheel turning constantly at the rate of 100 revolutions per minute, each would be said to have uniform motion.

The most familiar example of motion having *constant acceleration* is that of a body falling freely under the action of gravity. A weight dropped from a height will have at the start a zero speed. Under the action of the constant force of gravity its speed will increase at a constant rate such that at the end of one second the body will be moving at the rate of about 32.2 ft. per second and it will have dropped 16.1 ft. At the end of two seconds it will have a speed of 64.4 ft. per second and will have dropped 48.3 ft. during the second second. If the constant force acting were of different magnitude the amount of acceleration would be different but it would still be constant. The space moved over in successive intervals of time by a body having constant acceleration will be in the ratio of the odd numbers, 1, 3, 5, 7, 9, etc.

In the case of machine parts having variable acceleration the variation does not usually follow any simple law. One form of motion with variable acceleration, however, occurs not infrequently, and is known as **simple harmonic motion.** If a point, as R, Fig. 1, moves with uniform speed around the circumference of a semicircle and another point T moves across the diameter in the same length of time, the speed of T varying so that it will always be at the foot of a perpendicular let fall from R to the line AB, then T is said to have harmonic motion.

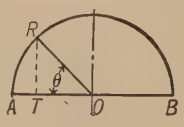

FIG. 1

The relation between the displacement AT of the point T from its initial position and the angle θ is expressed by the equation

$$AT = OA - OR \cos\theta = OR\,(1 - \cos\theta). \qquad (5)$$

The acceleration of the point T may be deduced as follows:

Let $s = AT$; ω = angular speed of OR in radians per second; t = time required for line OR to move through angle θ, therefore $\theta = \omega t$; v = speed

of T in linear units per second, a = acceleration in similar units per second each second.

Then from equation (5)

$$s = OR - OR \cos \theta = OR - OR \cos \omega t.$$

From equation (2) $$v = \frac{ds}{dt} = \omega OR \sin \omega t,$$

$$a = \frac{dv}{dt} = \frac{d^2s}{dt^2} = \omega^2 OR \cos \omega t,$$

but $$\cos \omega t = \frac{OT}{OR}.$$

Therefore $$a = \omega^2 OR \times \frac{OT}{OR} = \omega^2 OT. \qquad (5a)$$

Therefore the acceleration is proportional to the distance of the moving point from the center of its path. When T is approaching O its acceleration is positive and when receding from O the acceleration is negative.

The arrangement of parts in a mechanism may be such that one or more of the pieces has an increasing speed at the beginning, then moves at uniform speed during the greater part of the motion, and has decreasing speed at the end.

28. Modification of Motion. In the action of a mechanism the motion of the follower may differ from that of the driver in kind, in speed, in direction, or in all three. As the paths of motion of the driver and follower depend upon the connections with the frame of the machine, the change of motion in kind is fixed, and it only remains to determine the relations of direction and speed throughout the motion. The laws governing the changes in direction and speed can be determined by comparing the movements of the two pieces at each instant of their action, and the mode of action will fix the laws. Therefore, whatever the nature of the combination, if it is possible to determine, throughout the motion of the driver and follower, the speed ratio and directional relation, the analysis will be complete.

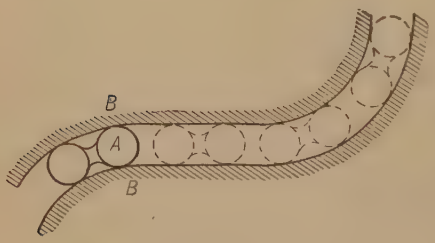

FIG. 2

Either the speed ratio or the directional relation may vary, or remain the same throughout the action of the two pieces.

29. Pairs of Elements. In order that a moving body, as A (Fig. 2), may remain continually in contact with another body B, and at the same time move in a definite path, B would have a shape which

could be found by allowing A to occupy a series of consecutive positions relative to B, and drawing the envelope of all these positions. Thus, if A were of the form shown in the figure, the form of B would be that of a curved channel. Therefore, in order to compel a body to move in a definite path, it must be paired with another, the shape of which is determined by the nature of the relative motion of the two bodies.

30. Closed or Lower Pair. If one element not only forms the envelope of the other, but encloses it, the forms of the elements being geometrically identical, the one being solid or full, and the other being hollow or open, we have what may be called a **closed pair,** also called a **lower pair.** In such a pair, *surface contact exists between the two members.*

On the surfaces of two bodies forming a closed pair, coincident lines may be supposed to be drawn, one on each surface; and if these lines are of such form as to allow them to move along each other, that is, allow a certain motion of the two bodies paired, three forms only can exist:

1° A straight line, which allows straight translation (Fig. 3).

2° Among plane curves, or curves of two dimensions, a circle, which allows rotation, or revolution (Figs. 4 and 5).

3° Among curves of three dimensions, the helix, which allows a combination of rotation and straight translation (Fig. 6).

FIG. 3

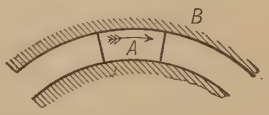

FIG. 4

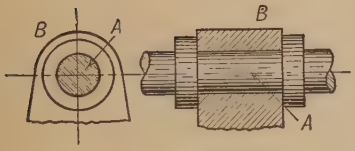

FIG. 5

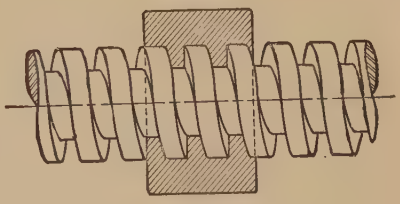

FIG. 6

31. Higher Pairs. The pair represented in Fig. 2 is not closed, as the elementary bodies A and B do not enclose each other in the above sense. Such a pair is called a **higher pair** and the *contact between the elements is along lines only.*

32. Incomplete Pairs of Elements. Hitherto it has been assumed that the reciprocal restraint of two elements forming a pair was complete, i.e., that each of the two bodies, by the rigidity of its material

and the form given to it, restrained the other. In certain cases it is only necessary to prevent forces having a certain definite direction from affecting the pair, and in such cases it is no longer absolutely necessary to make the pair complete; one element can then be cut away where it is not needed to resist the forces.

The bearings for railway axles, the steps for water-wheel shafts, the ways of a planer, railway wheels kept in contact with the rails by the force of gravity are all examples of incomplete pairs in which the elements are kept in contact by external forces.

33. Inversion of Pairs. In Fig. 3 if B is the fixed piece all points on A move in straight lines. If A were the fixed piece all points in B would move in straight lines. That is, the absolute motion of the moving piece is the same, whichever piece is fixed. The same statement holds true of the pairs shown in Figs. 4, 5 and 6.

This exchange of the fixedness of an element with its partner is called the **inversion of the pair,** and *in the case of any closed or lower pair it does not effect either the absolute or the relative motion.*

In the pairs shown in Figs. 2 and 7, both of which are higher pairs, *the relative motion of A and B is the same when A is fixed as when B is fixed. The absolute motion of A when B is fixed is not the same as the absolute motion of B when A is fixed.*

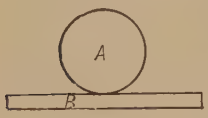

FIG. 7

34. Bearings. The word **bearing** is applied, in general, to the surfaces of contact between two pieces which have relative motion, one of which supports or partially supports the other. One of the pieces may be stationary, in which case the bearing may be called a **stationary bearing;** or both pieces may be moving.

The bearings may be arranged, according to the relative motions they will allow, in three classes:

1° For straight translation the bearings must have plane or cylindrical surfaces, cylindrical being understood in its most general sense. If one piece is fixed the surfaces of the moving pieces are called **slides;** those of the fixed pieces, **slides** or **guides.**

2° For rotation, or turning, the bearings must have surfaces of revolution, as circular cylinders, cones, conoids or flat disks. The surface of the solid or full piece is called a **journal, neck, spindle** or **pivot;** that of the hollow or open piece, a **bearing, gudgeon, pedestal, plumber-block, pillow-block, bush** or **step.**

3° For translation and rotation combined, or helical motion, they must have a helical or screw shape. Here the full piece is called a **screw** and the open piece a **nut.**

35. Collars and Keys. It is very often the case that pulleys or wheels are to turn freely on their cylindrical shafts and at the same time have no motion along them. For this purpose, **rings** or **collars** (Fig. 8a) are used; the collars D and E, held by set screws, prevent the motion of the pulley along the shaft but allow it free rotation. Sometimes pulleys or couplings must be free to slide along their

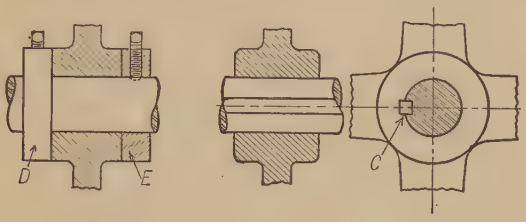

(a) (b)

FIG. 8

shafts, but at the same time must turn with them; they must then be changed to a sliding pair. This is often done by fitting to the shaft and pulley or sliding piece a key C (Fig. 8b), parallel to the axis of the shaft. The key may be made fast to either piece, the other having a groove in which it can slide freely. The above arrangement is very common, and is called a **feather** and **groove** or **spline,** or a **key** and **keyway.**

CHAPTER II

REVOLVING AND OSCILLATING BODIES

36. Revolving Bodies.* One of the most common motions in machinery is revolution or rotation about an axis. The rotating body may be a cylinder, or cone, or a piece of irregular form. The shaft or element upon which the rotating piece is supported may turn with it, being itself supported in bearings and restrained from moving endwise by collars; or the shaft may be held stationary and the piece turn on the shaft. An example of the first case is shown in Fig. 9 and of the second case in Fig. 10.

37. Angular Speed. Suppose some force is applied to the shaft in Fig. 9 so that it is caused to turn around, say, 75 times in a minute.

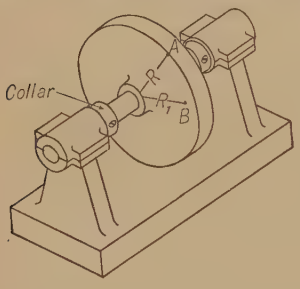

FIG. 9

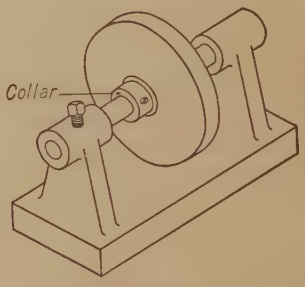

FIG. 10

If the wheel is fast to the shaft, the wheel will turn around 75 times in a minute. It would be said, then, that the wheel makes 75 revolutions per minute (usually abbreviated thus: 75 *r.p.m.*) It is common practice to speak of the angular speed or speed of turning in terms of revolutions per unit of time, usually per minute or second.

Another unit sometimes used for measuring angular motion is the angle called the **radian.** This is the angle which is subtended by the arc of a circle equal in length to the radius. Since the radius is contained in the circumference of a circle 2π times, there must be 2π radians in 360°, or one radian is equal to $360° \div 2\pi = 57° 17' 42''$.

If a revolving wheel turns once per minute, its angular speed as we have already seen is 1 *r.p.m.*, and since one revolution of the wheel causes

*Throughout this book the words *revolve* and *turn* will refer to turning about any axis, whether within or outside the body in question, while rotate will refer only to turning about an axis passing through the body.

any radial line on the wheel to sweep over 360° or 2π radians, the angular speed of the wheel is 2π radians per minute. Now, if the wheel turns N times per minute, the angular speed is N *r.p.m.* or $2\pi N$ radians per minute. That is,

$$\textit{Angular speed in radians} = 2\pi \times \textit{number of revolutions.} \qquad (6)$$

Example 1. If a wheel turns 90 *r.p.m.* its angular speed in radians is $2\pi\ 90 = 565.5$ radians per minute.

Referring to Fig. 11, let the body M be rigidly attached to an arm which is turning around the axis C, the arm and M revolving together. Then the lines CA and CB which join any two points A and B to the axis have angular speed about C and since the entire body is rigid and the angle ACB is constant, CA and CB each have the same angular speed as the arm. Moreover, since, as the body revolves, the line AB constantly changes direction, it may also be said to have angular speed, which, in this case, is the same as that of the lines CA and CB.

If M is not rigidly attached to the arm but is rotating on the axis S which is carried by the arm, as in Fig. 12, the lines CA, CB and AB will

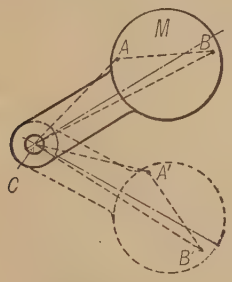

Fig. 11

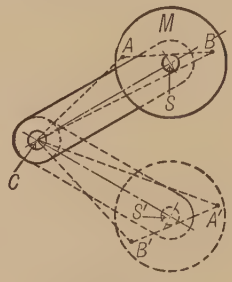

Fig. 12

no longer necessarily have the same angular speed since the angles turned through in a given time by these lines depend not only on the speed at which the arm is turning about C but also upon the speed at which M is turning about the axis S.

38. Linear Speed of a Point on a Revolving Body. Consider a point A on the circumference of the wheel in Fig. 9. While the wheel turns once, A travels over the circumference of a circle of the same diameter as the wheel, or it travels $2\pi R$ in. if the radius of the wheel is R in. Then, if the wheel turns N times in a unit of time, A travels over the circle N times in a unit of time. Therefore, the linear speed of the point A is $2\pi RN$ in. per unit of time. Writing this in the form of an equation,

$$\textit{Linear speed of } A = 2\pi RN. \qquad (7)$$

Example 2. Suppose the wheel is 12 in. in diameter and turns 40 times per minute. The speed of A would be

$$2\pi\, 6 \times 40 \text{ in. per minute} = 1506 \text{ in. per minute.}$$

From equation (6) it appears that the angular speed is equal to $2\pi N$ radians; so that, dividing equation (7) by equation (6)

$$\frac{\text{Linear speed of } A}{\text{Angular speed of wheel in radians}} = \frac{2\pi RN}{2\pi N} = \frac{R}{1},$$

or,

Linear speed of a point on a revolving body = angular speed of body in radians × distance of the point from the center. (8)

39. Speed Ratio of Points at Different Distances from Axis. If another point B is chosen on the side of the wheel at a distance R_1 from the center, it can be shown in the same way that Eq. (7) was derived, that

$$\text{Linear speed of } B = 2\pi R_1 N. \tag{9}$$

Now, dividing Eq. (7) by Eq. (9),

$$\frac{\text{Linear speed of } A}{\text{Linear speed of } B} = \frac{2\pi RN}{2\pi R_1 N}.$$

Therefore,

$$\frac{\text{Linear speed of } A}{\text{Linear speed of } B} = \frac{R}{R_1}. \tag{10}$$

Thus, *the linear speeds of two points on a revolving wheel are directly proportional to the distances of the points from the center about which the wheel is turning.*

The linear speed of a point on the circumference of a wheel is often spoken of as the **periphery-speed** or **surface speed** of the wheel.

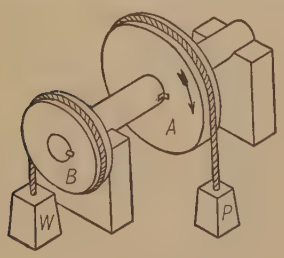

Fig. 13

Take another case, that of two wheels fast to the same shaft as shown in Fig. 13. The weight P is supposed to be hung from a steel band which is wound on the outside of wheel A and the weight W from another steel band wound on the outside of wheel B. Suppose that the shaft starts to turn in the direction shown by the arrow. Then the band which supports P will be paid out, that is, will unwind, at a speed equal to the periphery speed of A and the weight P will descend at that speed. At the same time the other band will be winding on to the wheel B and the weight W will be rising at a speed equal to the periphery speed of B. If N represents the number of turns per second of the shaft,

R the radius of A, R_1 the radius of B, then the speed of $P = 2\pi RN$ and speed of $W = 2\pi R_1 N$, or

$$\frac{\text{Speed } P}{\text{Speed } W} = \frac{R}{R_1}, \tag{11}$$

which is the same equation found when both points were on the same wheel.

Example 3. Let the diameter of $A = 12$ in. and the diameter of $B = 8$ in. and let the shaft turn $1\frac{1}{2}$ times per second. Then

$$\text{Speed } P = 2\pi \times 6 \times 1\tfrac{1}{2} = 56.55 \text{ in. per second.}$$
$$\text{Speed } W = 2\pi \times 4 \times 1\tfrac{1}{2} = 37.70 \text{ in. per second.}$$

Now, according to Eq. 11, these speeds should be in the ratio of 6 to 4 or 1.5 to 1, and if 56.55 is divided by 37.7, the result is equal to 1.5 except for the slight error due to carrying the figures to the nearest hundredth of an inch.

40. Relation between Forces and Speeds. Suppose that in Fig. 13 it is assumed that there is no friction and that the weights of P and W are such that, if the shaft is at rest, the weights will just balance each other, or, if the shaft is caused to start turning in a given direction, the weights will allow it to keep turning at a uniform speed.

The work done by a force is equal to the force, expressed in units of force, multiplied by the distance through which the force acts, expressed in linear units, provided the motion takes place in the direction in which the force acts. Now, if friction is neglected, the work obtained from a machine must equal the work put into it. Hence, in Fig. 13, if the falling weight P be considered as the force driving the machine, the work put into the machine is the weight P multiplied by the distance P falls. The work obtained from the machine is the weight of W multiplied by the distance W is raised.

Then the weight of P (in pounds or other weight units) multiplied by the distance P moves in a given length of time is equal to the weight of W multiplied by the distance it moves in the same time, the units of weight and distance being the same in both cases. If the shaft is assumed to make N turns, the distances moved by P and W are $2\pi RN$ and $2\pi R_1 N$, respectively.

Therefore,
$$P \times 2\pi RN = W \times 2\pi R_1 N, \tag{12}$$

or
$$\frac{\text{Weight of } P}{\text{Weight of } W} = \frac{R_1}{R}. \tag{13}$$

Since from Eq. (11) the

$$\frac{\text{Linear speed of } P}{\text{Linear speed of } W} = \frac{R}{R_1},$$

Therefore, $$\frac{\text{Weight of } P}{\text{Weight of } W} = \frac{\text{Speed of } W}{\text{Speed of } P}. \qquad (14)^*$$

41. Cranks and Levers. A crank may be defined in a general way as an arm rotating or oscillating about an axis. It may be thought of as a piece cut out of a wheel or disk, as suggested by the dotted circle in Fig. 14, and the laws for revolving wheels apply equally to cranks. When two cranks are rigidly connected to each other the name **lever** is often applied to the combination, particularly when the motion is oscillating over a relatively small angle.

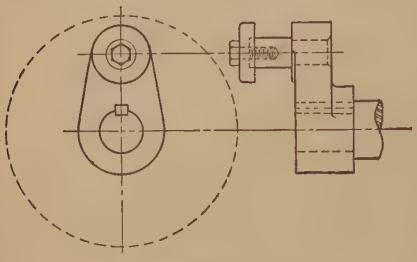

Fig. 14

In Fig. 15 the two arms of the lever are shown at an angle of 180° with each other. This condition does not necessarily hold, however, for the two arms may make any angle with each other from 180° as in Fig. 15 down to 0° as in Fig. 16. When the angle between the two arms is less than 90° as in Figs. 16 and 17 it is often called a **bell crank**

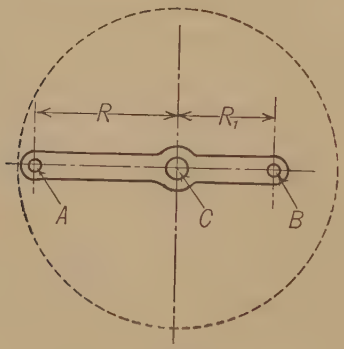

Fig. 15

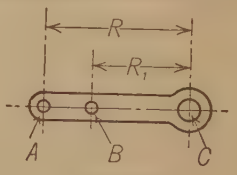

Fig. 16

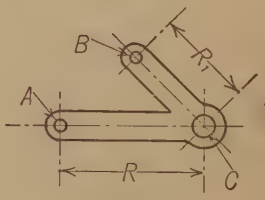

Fig. 17

lever, and when the angle is more than 90° as in Figs. 15 and 18 it is often called a **rocker.** These terms, however, are used rather loosely and somewhat interchangeably.

In all these cases the following equation holds true:

$$\frac{\text{Linear speed } A}{\text{Linear speed } B} = \frac{\text{Distance of } A \text{ from axis}}{\text{Distance of } B \text{ from axis}}. \qquad (15)$$

* It must be always borne in mind that any equation such as Eq. (14) does not take friction into account.

The two lever arms may be in the same plane as in Figs. 15 to 18 or they may be attached to the same shaft but lie in different planes as in Fig. 19.

42. Motion from Levers. It is often necessary to transfer some small motion from one line to another. Three cases will be considered which depend on the relative positions of the lines of motion:

1° Parallel lines.
2° Intersecting lines.
3° Lines neither parallel nor intersecting.

The first case is an application of the form of lever shown in Figs. 15 and 16, and also Fig. 19 if the arms CA and CB are in the same plane

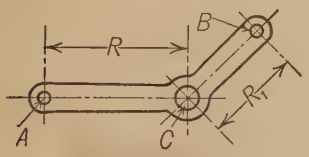

FIG. 18

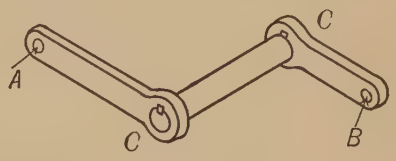

FIG. 19

passing through the axis of the shaft. The motions of A and B are directly proportional to their distances from the axis C. In Fig. 15,

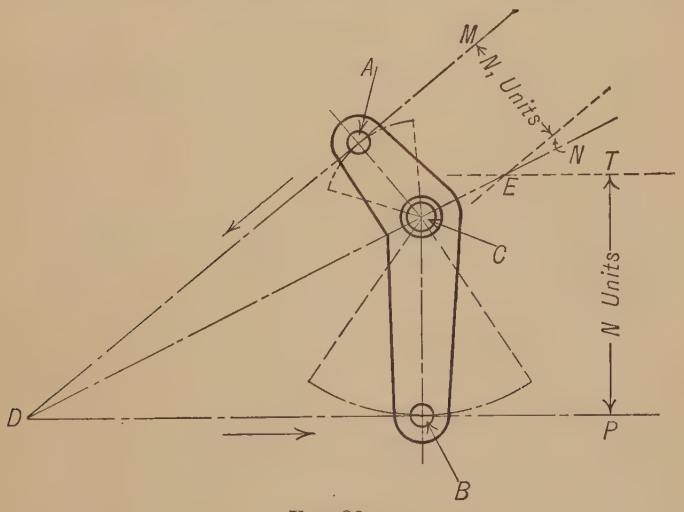

FIG. 20a

A and B are always moving in opposite directions, while, in Fig. 16, A and B move in the same direction.

In the second case a bent lever is used of the type shown in Figs. 17 and 18. Referring to Fig. 20a, let it be assumed that a lever is to

be laid out which will give motion along AD bearing a known ratio to that along BD.

Draw the line DC, dividing the angle ADB into two angles ADE and BDE whose sines are directly proportional to the motions required along AD and BD respectively.

This may be done by erecting perpendiculars MN and PT on AD and BD in the ratio of the required motions along those lines, and drawing through their extremities N and T lines parallel to AD and BD respectively; the intersection of these lines at E determines the line

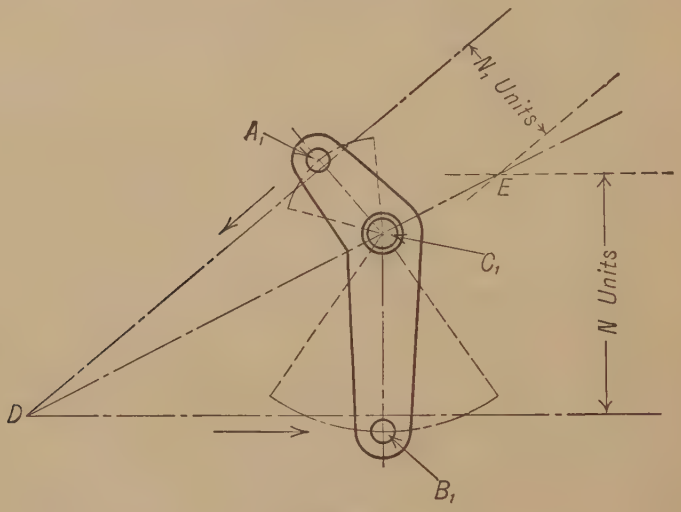

FIG. 20b

DE. Choose any point C in DE, and drop the perpendiculars CA and CB on AD and BD respectively; then ACB is the bell-crank lever required. As the lever moves

$$\frac{\text{Linear speed of } A}{\text{Linear speed of } B} = \frac{AC}{BC} = \frac{\sin CDA}{\sin CDB}.$$

It is evident that, for a small angular motion, the movements in AD and BD are very nearly rectilinear, and they will become more and more so the farther C is removed from the point D.

Any slight motion that may occur perpendicular to the lines AD and BD may be provided for by the connectors used. It is to be noticed, however, that for a given motion on the lines AD and BD these perpendicular movements, or deviations, are less when the lever-arms vibrate equal angles each side of the positions which they occupy when perpendicular to the lines of motion, and they should always be

arranged to so vibrate. By moving the point C nearer to D, at the same time keeping the lever-arms the same, this perpendicular deviation could be disposed equally on each side of the lines of motion which is advisable especially in cases where the deviation is allowed

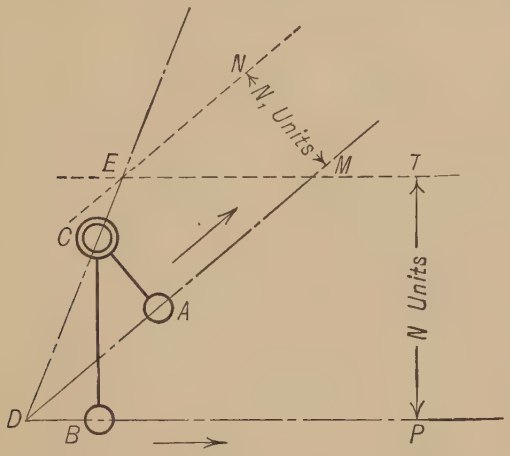

Fig. 21

for by the spring of the connecting piece. This is shown in position $A_1C_1B_1$, Fig. 20b. In Fig. 20 it will be seen that A and B move in opposite directions, while Fig. 21 shows the result if A and B are to move in the same direction.

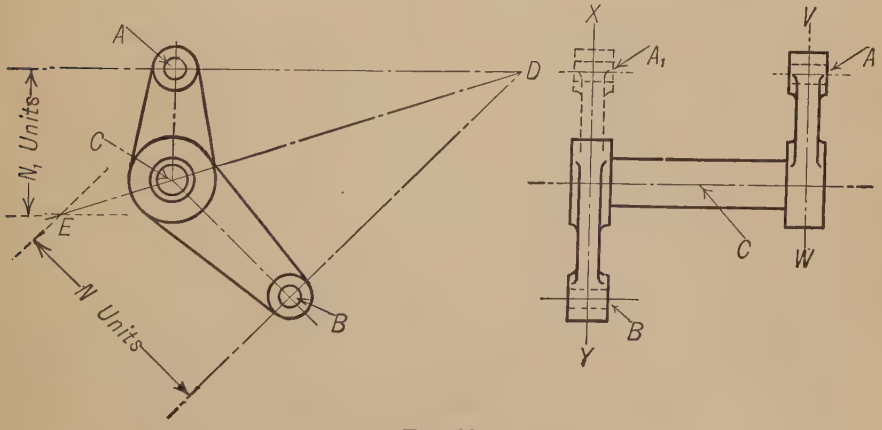

Fig. 22

In the third case a lever of the type of Fig. 19 would be used with the arms CA and CB making the proper angle with each other. Let

BD be the line along which *B* is to give motion and *AD* the line along which *A* is to give motion. Let *BD* lie in the plane *XY* and *AD* lie in the plane *VW*. To find the position of the line *DC* which is the trace of the plane containing the axis of the shaft, assume the plane *VW* to be moved to the left until it coincides with *XY*. Then lay out the lever in the left elevation as described for Fig. 20. Next assume the plane *VW* moved back to its proper position, carrying the arm *CA* with it.

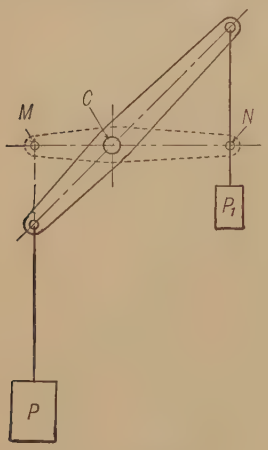

Fig. 23

43. Effective Lever Arms. In the case of a lever in a position

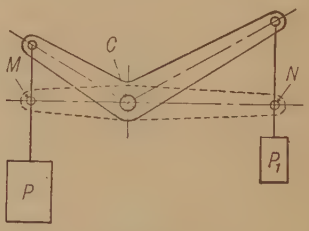

Fig. 24

such as indicated in Figs. 23 or 24, the effect is the same, for the instant, as if the weights *P* and P_1 were attached to the lever *MCN*, whose arms are found by drawing perpendiculars from the axis *C* to the line of action of the forces exerted by the weights *P* and P_1. The perpendiculars *CM* and *CN* may be called the **effective lever arms** or **moment arms** of the weights.

CHAPTER III

BELTS, ROPES AND CHAINS

44. Flexible Connectors. If the wheel A, Fig. 25, is turning at a certain angular speed about the axis S its outer surface will have a linear speed dependent upon the angular speed and the diameter of A. (See § 38.)

If a flexible band is stretched over A, connecting it with another wheel B and there is sufficient friction between the band and the surfaces of the wheels to prevent appreciable slipping, then the band will move with a linear speed approximately equal to the surface speed of A, and will impart approximately the same linear speed to the surface of B, thus causing B to turn. The wheels may be on axes which are parallel, intersecting, or neither parallel nor intersecting.

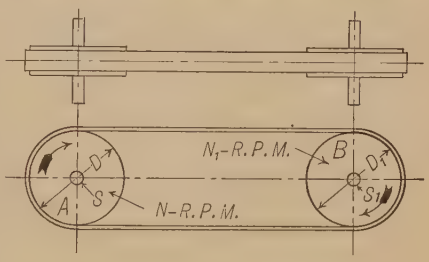

Fig. 25

Flexible connectors may be divided into three general classes:

1° **Belts** made of leather, rubber, or woven fabrics are flat and thin, and require pulleys nearly cylindrical with smooth surfaces. Flat ropes may be classed as belts.

2° **Cords** made of catgut, leather, hemp, cotton or wire are nearly circular in section and require either grooved pulleys or drums with flanges. Rope gearing, either by cotton or wire ropes, may be placed under this head.

3° **Chains** are composed of links or bars, usually metallic, jointed together, and require wheels or drums either grooved, notched, or toothed, so as to fit the links of the chain.

For convenience the word **band** may be used as a general term to denote all kinds of flexible connectors.

Bands for communicating continuous motion are endless.

Bands for communicating reciprocating motion are usually made fast at their ends to the pulleys or drums which they connect.

45. Pitch Surface and Line of Connection. Fig. 26 represents the edge view of a piece of a belt before being wrapped around the pulley. If it is assumed that there are no irregularities in the make up of the belt the upper surface o is parallel to and equal in length to the surface i. When this same belt is stretched around a pulley, as in Fig. 27, the surface i is drawn firmly against the surface of the pulley while the surface o bends over a circle whose radius is greater than that of the surface of the pulley by an amount equal to the belt thickness 2ρ.

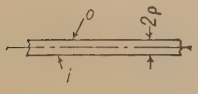

Fig. 26

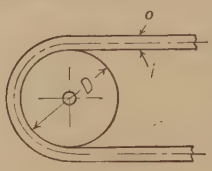

Fig. 27

The outer part of the belt must therefore stretch somewhat and the inner part compress. There will be some section between i and o which is neither stretched nor compressed and the name *neutral section* may be given to this part of the belt. In the case of a flat belt the neutral section may be assumed to be half way between the outer and inner surfaces. An imaginary cylindrical surface around the pulley, to which the neutral section of the belt is tangent, is the **pitch surface** of the pulley, the radius of this being the **effective radius** of the pulley. A line in the neutral section of the belt at the center of its width is the line of connection between two pulleys and is tangent to the pitch surfaces, and coincides with a line in each pitch surface known as the **pitch line.**

46. Speed Ratio and Directional Relation of Shafts Connected by a Belt. In Fig. 25 let the diameter of the pulley A be D inches, the diameter of B be D_1 inches and the half thickness of belt $= \rho$. Also let N represent the *r.p.m.* of S, and $N_1 =$ *r.p.m.* of S_1.

Then, from equation (7),

$$\text{Linear speed of pitch surface of } A = \pi N\,(D + 2\,\rho),$$

and

$$\text{Linear speed of pitch surface of } B = \pi N_1\,(D_1 + 2\,\rho).$$

If the belt speed is supposed to be equal to the speed of the pitch surfaces of the pulleys

$$\pi N\,(D + 2\,\rho) = \pi N_1\,(D_1 + 2\,\rho),$$

or

$$\frac{N}{N_1} = \frac{D_1 + 2\,\rho}{D + 2\,\rho}. \tag{16}$$

That is, the angular speeds of the shafts are in the inverse ratio of the effective diameters of the pulleys, and this ratio is constant for circular pulleys.

As the thickness of belts generally is small as compared with the diameters of the pulleys, it may be neglected.
The speed ratio will then become

$$\frac{N}{N_1} = \frac{D_1}{D}, \tag{17}$$

which is the equation almost always used in practical calculations.

Example 4. Assume that a shaft A makes 360 *r.p.m.* On A is a pulley 24 ins. in diameter belted to a pulley 36 ins. in diameter on another shaft B. To find speed of shaft B.

From Eq. (17)

$$\frac{\text{Speed of } A}{\text{Speed of } B} = \frac{\text{Diam. of pulley on } B}{\text{Diam. of pulley on } A}.$$

Substituting the known values, this equation becomes

$$\frac{360}{\text{Speed of } B} = \frac{36}{24}.$$

Therefore, Speed of $B = \frac{24}{36} \times 360 = 240$ *r.p.m.*

Example 5. Suppose a shaft A making 210 *r.p.m.* is driven by a belt from a 30-in. pulley on another shaft B which makes 140 *r.p.m.*; to find the size of the pulley on A.

Using the principle of Eq. (17)

$$\frac{\text{Speed of } A}{\text{Speed of } B} = \frac{\text{Diam. of pulley on } B}{\text{Diam. of pulley on } A}.$$

Therefore, $\frac{210}{140} = \frac{30}{x}$ or $x = \frac{30 \times 140}{210} = 20$ ins.

Then a 20-in. pulley is required on A.

The relative directions in which the pulleys turn depend upon the manner in which the belt is put on the pulleys. The belt shown in Fig. 25 is known as an **open belt** and the pulleys turn in the same direction, as suggested by the arrows. The belt shown in Fig. 28 is known as a **crossed belt** and the pulleys turn in opposite directions as indicated.

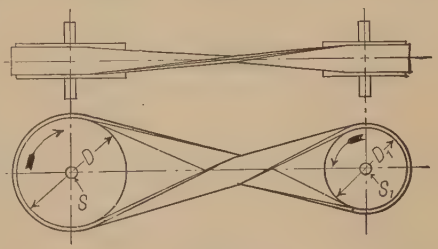

Fig. 28

47. Kinds of Belts. The material most commonly used for flat belts is leather. For some kinds of work, however, belts woven from cotton or other similar material are used. When the belt is to be run in a place where there is much moisture, it may be made largely of rubber properly combined with fibrous material in order to give strength.

Leather belts are made by gluing or riveting together strips of leather cut lengthwise of the hide, near the animal's back. If single thicknesses of the leather are fastened end to end, the belt is known as a **single belt** and it is usually about $\frac{3}{16}$ in. thick. If two thicknesses of leather are glued together, flesh side to flesh side, the belt is known as a **double belt** and is from $\frac{5}{16}$ to $\frac{3}{8}$ in. thick. The manner of uniting the ends of the strips to form a belt, and of fastening together the ends of the belt to make a continuous band for running over pulleys, is very important. A detailed discussion of these features is not necessary, however, in the present study of the subject.

Leather belts always should be run with the hair side against the pulleys, if possible.

48. Power of Belting. The amount of power which a given belt can transmit depends upon its speed, its strength and its ability to adhere to the surface of the pulleys. The speed is usually assumed to be the same as the surface speed of the pulleys. The strength, of course, depends upon the width and thickness and upon the nature of the material of which the belt is made. The ability to cling to the pulley so as to run with little or no slipping depends upon the condition of the pulley surfaces and of the surface of the belt which is in contact with the pulleys, and upon the tightness with which the belt is stretched over the pulleys. Since leather belts are more common and more nearly uniform in their character than those of other materials, the discussion of power will be confined to them.

49. Unit of Power — Horse Power. In order to measure the power, or the amount of work done, by any force, it is necessary to have some standard of measurement. A common unit for measuring work done is that known as the foot-pound. A **foot-pound** is the amount of work done in raising a one-pound weight a distance of one foot, or in moving any number of pounds through such a distance that the product of the force exerted multiplied by the distance moved is equal to one. For example, if a 12-lb. weight is lifted one-twelfth of a foot, the work done is 12 lbs. $\times$ $\frac{1}{12}$ ft. = 1 ft.-lb. If the apparatus furnishing the force to raise this weight is such that it can raise it in one minute, the apparatus is said to be capable of doing one foot-pound of work per minute, or to have a power of one foot-pound per minute.

For measuring large quantities of power a larger unit is used, known as a horse power. One **horse power** is equal 33,000 ft.-lbs. of work per minute. For example, an engine which is capable of doing one horse power work is one which can move 1 lb. through a distance of 33,000 ft. per minute, or 33,000 lbs. 1 ft. per minute, or any num-

ber of pounds through such a distance in a minute that the product of the force multiplied by the distance moved in a minute is 33,000.

50. Tension in a Belt. In Fig. 29 suppose the pulley A is fast to the shaft S and the pulley B fast to the shaft S_1. Let it be assumed that when the shafts are at rest a belt is stretched over the pulleys as shown, the tightness with which it is stretched being such that there is a tension or pull in the belt of a definite number of pounds. This tension is practically the same at all places in the belt and is called the *initial tension*. Let this initial tension be represented by the letter T_0. Suppose now that some external force is applied to the shaft S causing it to tend to turn in the direction indicated by the arrow. This tendency to turn will increase the tension in the lower part of the belt (say between m and n) and decrease the tension in the upper part. Let the new tension in the lower or tight side of the belt be represented by T_1 (which is greater than T_0) and the tension in the upper or slack side by T_2 (which is less than T_0).

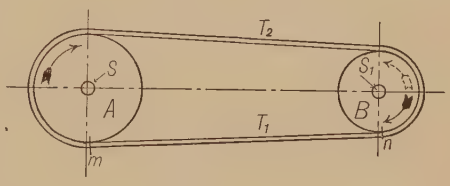

FIG. 29

If the belt sticks to the pulley B so that there is no slipping, the force T_1 tends to cause the pulley B to turn as shown by the full arrow and the force T_2 tends to cause B to turn as shown by the dotted arrow. As soon as T_1 becomes enough greater than T_2 to overcome whatever resistance the shaft S_1 offers to turning, the pulleys will begin to turn in the direction of the full arrow. The unbalanced force, then, which makes the driven pulley B turn is the difference between the tension T_1 on the tight side of the belt and the tension T_2 on the slack side of the belt. This difference in tensions is called the **effective pull** of the belt and is here represented by the letter E.

From the above discussion it may be seen that the following equation holds true:

$$T_1 - T_2 = E. \qquad (18)$$

51. To Find the Horse Power of a Belt. Since, as explained in the previous paragraph, the effective pull is the force in the belt which enables it to do work, it follows that the product of the effective pull multiplied by the speed of the belt in feet per minute will give the foot-pounds of work per minute that the belt performs, and this divided by 33,000 will give the horse power which the belt transmits. If N is

the *r.p.m.* of S, and D the diameter of pulley A (in feet) the following equation expresses the horse power of the belt.

$$\frac{\text{Belt speed in ft. per minute} \times E}{33{,}000} = \text{H.P.} \qquad (19)$$

or

$$\frac{\pi DN\,(T_1 - T_2)}{33{,}000} = \text{H.P.} \qquad (20)$$

It is evident from the above that for a given belt speed the greater the difference between T_1 and T_2 the more horse power the belt transmits. Any figures which may be given for the maximum allowable stress in a belt and the maximum ratio $\frac{T_1}{T_2}$ are necessarily approximate and somewhat a matter of opinion. For the purpose of illustrating the method of calculating the power which a given belt might be expected to transmit it will be assumed that $\frac{T_1}{T_2}$ may not exceed $\frac{7}{3}$ and that the maximum allowable tension per inch of width is 140 pounds for a double leather belt and 75 pounds for a single belt. If it is still further assumed that stresses due to centrifugal force may be neglected,

$$\frac{T_1}{T_2} = \frac{7}{3} \text{ and } T_1 = 140 \text{ lb. per inch of width,}$$

whence

$T_1 - T_2 = 80$ lb.

= maximum effective pull per inch of width of double belt.

Also $\frac{T_1}{T_2} = \frac{7}{3}$ and $T_1 = 75$,

whence

$T_1 - T_2 = 43$ lb. (nearly)

= maximum effective pull per inch of width of single belt.

Substituting these values in Eq. (19),

$$\frac{\textit{Belt speed in ft. per minute} \times \textit{43} \times \textit{width of belt in inches}}{\textit{33,000}} = \textit{H.P. a single belt will transmit.} \qquad (21)$$

$$\frac{\textit{Belt speed in ft. per minute} \times \textit{80} \times \textit{width of belt in inches}}{\textit{33,000}} = \textit{H.P. a double belt will transmit.} \qquad (22)$$

Corrections must be made in equations (21) and (22) if the belt speed is such that centrifugal force must be taken into account. It must also be borne in mind that the figures *43* and *80* are subject to modification.

A simple and somewhat more conservative rule for estimating the power of a belt is known as the **millwrights' rule** and has been determined largely by experience. This rule is as follows:

A single belt traveling 1000 *ft. per minute will transmit* 1 *H.P. per inch of width and a double belt traveling* 560 *ft. per minute will transmit* 1 *H.P. per inch of width.*

Whence

$$\frac{\textit{Belt speed in ft. per minute} \times \textit{width of belt in inches}}{1000} = \textit{H.P. a single belt will transmit.} \quad (23)$$

$$\frac{\textit{Belt speed in ft. per minute} \times \textit{width of belt in inches}}{560} = \textit{H.P. a double belt will transmit.} \quad (24)$$

Example 6. A shaft carrying a 48-in. pulley runs at a speed of 180 *r.p.m.* An 8-in. double belt runs over the pulley and drives another shaft. To find the power that the belt can be expected to transmit without excessive strain.

Solution 1. Using formula (22),

$$\text{Belt speed in feet} = \frac{\pi\, 48}{12} \times 180 = 2262 \text{ ft. per minute.}$$

Then $$\frac{2262 \times 80 \times 8}{33{,}000} = 43\tfrac{1}{2} \text{ H.P. (nearly).}$$

Solution 2. Using formula (24)

Belt speed as in solution 1 = 2262,

$$\frac{2262 \times 8}{560} = 32 \text{ H.P.}$$

It will be noticed that the two solutions given above give widely different answers, that from the millwrights' rule being nearly 25 per cent less than the other. For the higher belt speeds this difference will not be as great if proper allowance is made for centrifugal force. Any such solution for a belt must be considered approximate, and merely furnishes a means of estimating the horse power roughly. There is no doubt that the above belt, if in proper condition, would carry much more than even the $43\frac{1}{2}$ H.P., but the heavier the belt is loaded the more attention it will require and the shorter will be its life.

Example 7. A shaft running 200 *r.p.m.* is driven by a single belt on a 24-in. pulley. 15 H.P. is required. To find a suitable width of belt to use.

Solution 1. Using formula (21),

$$\text{Belt speed} = \frac{\pi\, 24}{12} \times 200 = 1257 \text{ ft. per minute.}$$

Then, $$\frac{1257 \times 43 \times \text{width}}{33{,}000} = 15,$$

$$\text{Width} = \frac{15 \times 33{,}000}{1257 \times 43} = 9 \text{ in. nearly.}$$

Solution 2. Using formula (23),

$$\frac{1257 \times \text{width}}{1000} = 15,$$

$$\text{Width} = \frac{15{,}000}{1257} = 12 \text{ in. nearly.}$$

Here again the millwrights' rule shows a wider belt necessary for a given horse power.

Example 8. Two shafts A and B are to be connected by a 12-in. double belt carrying 72 H.P. A is the driving shaft, making 240 *r.p.m.* B is to run 180 *r.p.m.* To find the size of the pulleys on A and B, using the millrights' rule.

First find the necessary belt speed using Eq. (24).

$$\frac{\text{Belt speed} \times 12}{560} = 72,$$

$$\therefore \quad \text{Belt speed} = \frac{72 \times 560}{12} = 3360 \text{ ft. per minute.}$$

Since B is to turn 180 *r.p.m.*, if x = the diameter of the pulley on B, then,

$$\pi x \times 180 = 3360$$

or

$$x = \frac{3360}{180\,\pi} = 5.94 \text{ ft.} = 71.28 \text{ in.}$$

or, since pulleys of that size would not be made in fractional inches, a 72-in. pulley would be used.

$$\frac{\text{Pulley on } A}{\text{Pulley on } B} = \frac{180}{240},$$

whence

$$\text{Pulley on } A = 72 \times \tfrac{180}{240} = 54 \text{ in.}$$

52. Approximate Formula for Calculating the Length of Belts. In finding the length of belt required for a known pair of pulleys at a known distance apart, the most satisfactory method, when possible, is to stretch a steel tape over the actual pulleys after they are in position, making a reasonable allowance (about 1″ in every 10 ft.) for stretch of the belt. Often, however, it is necessary to find the belt length from the drawings before the pulleys are in place or when, for some other reason, it is not convenient actually to measure the length. Various formulas have been devised by which the length may be calculated when the pulley diameters and distance between centers of the shafts are known. These formulas, if exact, are all more or less complex and are, of course, different for crossed and for open belts. If the distance between shafts is large, the following will give an approximate value for the length of the belt. Referring to Fig. 31 and letting L represent the length of the belt,

$$L = \frac{\pi (D + d)}{2} + 2\,C. \tag{25}$$

D, d and C, must be expressed in like linear units; if in feet, the resulting value of L will be in feet; if in inches, the value of L will be in inches.

In the case of an open belt where the two pulleys are of the same diameter the above formula gives an exact answer. If the pulleys are not of the same diameter, the length of belt obtained by Eq. (25) will be less than the correct length. If the shafts are several feet apart and the difference in diameters of the pulleys is not great, the percentage error is very small for an open belt. With a crossed belt, pulleys of medium size and the shafts several feet apart, the result from the use of Eq. (25) is considerably less than the real length. This equation is accurate enough to use for an estimate of the length of a belt.

53. Exact Formulas for Length of Belt Connecting Parallel Axes. While the methods given in the preceding paragraph are sufficient for the conditions there referred to, it is necessary in designing certain pulleys, known as stepped pulleys and cone pulleys, to make use of an equation expressing exactly, or very nearly so, the belt length in terms of the diameters and the distance between centers of the pulleys. The crossed belt and the open belt must be considered separately.

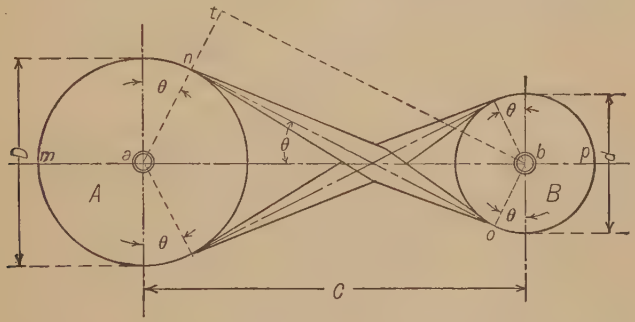

FIG. 30

Crossed Belts. Let D and d (Fig. 30) be the diameters of the connected pulleys; C the distance between their axes; L the length of the belt.

Then
$$L = 2\,(mn + no + op)$$
$$= \left(\frac{\pi}{2} + \theta\right) D + 2\,C\cos\theta + \left(\frac{\pi}{2} + \theta\right) d$$
$$= \left(\frac{\pi}{2} + \theta\right)(D + d) + 2\,C\cos\theta, \qquad (26)$$

where
$$\sin\theta = \frac{at}{ab} = \frac{an + bo}{ab} = \frac{D + d}{2\,C}.$$

Open Belts. Using the same notation as for crossed belts, we have (Fig. 31)

$$L = 2\,(mn + no + op)$$
$$= \left(\frac{\pi}{2} + \theta\right) D + 2\,C\cos\theta + \left(\frac{\pi}{2} - \theta\right) d$$
$$= \frac{\pi}{2}\,(D + d) + \theta\,(D - d) + 2\,C\cos\theta, \qquad (27)$$

where $\sin\theta = \dfrac{an - bo}{C} = \dfrac{D - d}{2\,C}$

and $\cos\theta = \sqrt{1 - \dfrac{(D-d)^2}{4\,C^2}}$.

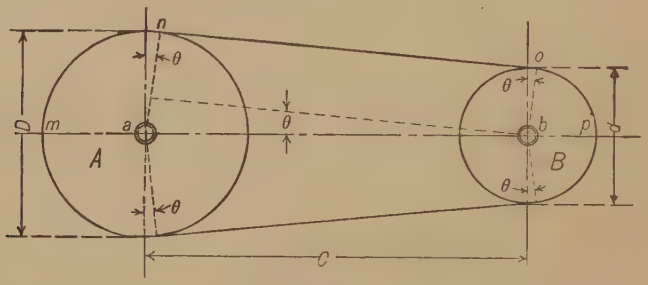

Fig. 31

For an open belt, θ is generally small, so that $\theta = \sin\theta$, very nearly; then

$$L = \frac{\pi}{2}\,(D + d) + \frac{(D-d)^2}{2\,C} + 2\,C\sqrt{1 - \frac{(D-d)^2}{4\,C^2}}, \text{ nearly,}$$
$$= \frac{\pi}{2}\,(D + d) + 2\,C\left\{\frac{(D-d)^2}{4\,C^2} + \sqrt{1 - \frac{(D-d)^2}{4\,C^2}}\right\}, \text{ nearly.}$$

If the quantity under the radical sign is expanded, and all terms having a higher power of C than the square in the denominator are neglected, since C is always large compared with $(D - d)$,

$$L = \frac{\pi}{2}\,(D + d) + 2\,C\left\{\frac{(D-d)^2}{4\,C^2} + 1 - \frac{(D-d)^2}{8\,C^2} \cdot \cdot \cdot\right\}$$

or $$L = \frac{\pi}{2}(D + d) + 2\,C + \frac{(D-d)^2}{4\,C}, \text{ very nearly.} \qquad (28)$$

54. Stepped Pulleys. Sometimes it is necessary to have such a belt connection between two shafts that the speed of the driven shaft may be changed readily while the speed of the driving shaft remains constant. One method of accomplishing this is the use of a pair of

pulleys each of which has several diameters as shown in Fig. 32. Such pulleys are known as stepped pulleys. Suppose that the shaft S, Fig. 32, is the driver, making N *r.p.m.* When the belt is in the position shown in full lines, the working diameter of pulley A is D_1 and the working diameter of pulley B is d_1. Then if n_1 represents the *r.p.m.* of S_1, when the belt is in this place,

$$\frac{n_1}{N} = \frac{D_1}{d_1}.$$

If the belt is shifted to any other position, as that shown by dotted lines, D_x becomes the working diameter of the driving pulley and d_x of the driven pulley. If n_x represents the speed of S_1 for this belt position

$$\frac{n_x}{N} = \frac{D_x}{d_x}.$$

Therefore, by properly proportioning the diameters of the different pairs of steps, it is possible to get any desired series of speeds for the driven shaft.

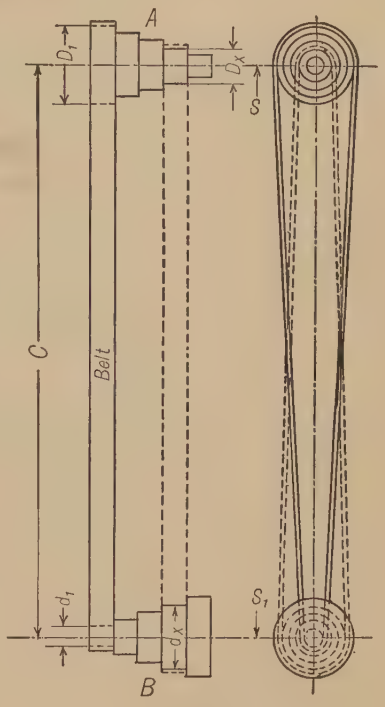

Fig. 32

In designing such a pair of pulleys two things must be taken into account. *First*, the ratio of the diameters of the successive pairs of steps must be such as to give the desired speed ratios. *Second*, the sum of the diameters of any pair of steps must be such as to maintain the proper tightness of the belt for all positions. This second consideration makes the problem of design considerably more complicated.

Two cases arise: *First*, the design of the pulleys for a crossed belt and *second*, the design for an open belt.

55. Stepped Pulleys for Crossed Belt. Assuming that the value of D_1, N, n_1, n_x and C are known for the drive shown in Fig. 32, and assuming that the belt is crossed, instead of open as there shown, let it be required to find a method for calculating D_x and d_x.

First find d_1, which is readily done from the equation

$$\frac{n_1}{N} = \frac{D_1}{d_1},$$

in which d_1 is the only unknown quantity. Knowing, then, D_1 and d_1 the value of $D_1 + d_1$ is known.

From Eq. (26) the length of the belt to go over the steps D_1 and d_1 is

$$\left(\frac{\pi}{2} + \theta_1\right)(D_1 + d_1) + 2\,C\cos\theta_1.$$

When the belt is on the steps whose diameters are D_x and d_x the equation for the length of the belt is

$$\left(\frac{\pi}{2} + \theta_x\right)(D_x + d_x) + 2\,C\cos\theta_x.$$

Since the same belt is to be used on both pairs of steps the value of these two equations must be the same.

Therefore,

$$\left(\frac{\pi}{2} + \theta_1\right)(D_1 + d_1) + 2\,C\cos\theta_1 = \left(\frac{\pi}{2} + \theta_x\right)(D_x + d_x) + 2\,C\cos\theta_x.$$

Since C is a constant and θ is dependent upon C and $D + d$ it follows that the above equation will be satisfied if

$$D_x + d_x = D_1 + d_1. \tag{29}$$

Therefore in designing a pair of stepped pulleys for a crossed belt the sum of the diameters of all pairs of steps must be the same.

Then from the equation

$$\frac{n_x}{N} = \frac{D_x}{d_x}$$

and Eq. (29)

$$D_x + d_x = D_1 + d_1.$$

D_x and d_x may be found by the method of simultaneous equations.

Example 9. To find the diameters of all the steps in the pulleys shown in Fig. 33 if a crossed belt is to be used.

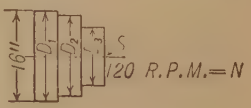

First, find d_1 from the equation $\frac{n_1}{N} = \frac{D_1}{d_1}$

or $$\frac{192}{120} = \frac{16}{d_1},$$

whence $$d_1 = \frac{16 \times 120}{192} = 10 \text{ in.}$$

Therefore, $$D_1 + d_1 = 16 + 10 = 26 \text{ in.}$$

From Eq. (29) $$D_2 + d_2 = D_1 + d_1 = 26 \text{ in.}$$

and $$\frac{D_2}{d_2} = \frac{160}{120}$$

FIG. 33

or $D_2 = \frac{4}{3} d_2$.

Substituting this value of D_2 in the preceding equation,

$$\tfrac{4}{3} d_2 + d_2 = 26$$

or $\tfrac{7}{3} d_2 = 26$,

whence $d_2 = \dfrac{26 \times 3}{7} = 11\tfrac{1}{7}$ in. $= 11.14$ in.

and $D_2 = 26 - 11\tfrac{1}{7} = 14\tfrac{6}{7}$ in. $= 14.86$ in.

Again, $D_3 + d_3 = 26$ in.

and $\dfrac{D_3}{d_3} = \dfrac{80}{120}$

or $D_3 = \frac{2}{3} d_3$,

$\therefore \quad \tfrac{2}{3} d_3 + d_3 = 26$,

or $\tfrac{5}{3} d_3 = 26$ in.,

whence $d_3 = 15\tfrac{3}{5}$ in. $= 15.6$ in.

and $D_3 = 26 - 15\tfrac{3}{5} = 10\tfrac{2}{5}$ in. $= 10.4$ in.

56. Stepped Pulleys for Open Belt. Referring still to Fig. 32, if the belt is open its length when on the steps D_1 and d_1 is, from equation (28),

$$L = \frac{\pi}{2}(D_1 + d_1) + 2C + \frac{(D_1 - d_1)^2}{4C},$$

and when on steps D_x and d_x

$$L = \frac{\pi}{2}(D_x + d_x) + 2C + \frac{(D_x - d_x)^2}{4C}.$$

Equating these two expressions gives

$$\frac{\pi}{2}(D_1 + d_1) + \frac{(D_1 - d_1)^2}{4C} = \frac{\pi}{2}(D_x + d_x) + \frac{(D_x - d_x)^2}{4C}. \qquad (30)$$

This may be solved simultaneously with $\dfrac{n_x}{N} = \dfrac{D_x}{d_x}$ to get the values of D_x and d_x.*

If the shafts are several feet apart and the range of speeds for the driven shaft is not excessive the diameters calculated for an open belt differ only very slightly from those for a crossed belt, and stepped pulleys designed for a crossed belt are often used for an open belt. If the shafts are close together and the speed range is large the crossed belt pulleys cannot be used for an open belt.

* Equation (30) may be written in the form

$$D_x + d_x = D_1 + d_1 + \frac{(D_1 - d_1)^2 - (D_x - d_x)^2}{2\pi C}.$$

This may be solved approximately, in connection with $\dfrac{n_x}{N} = \dfrac{D_x}{d_x}$, by substituting for $(D_x - d_x)^2$ the value which it would have if the belt were crossed.

Example 10. To find the diameters of all the steps in the pulleys shown in Fig. 34, if an open belt is to be used. Shafts 24″ on centers.

First find d_1 from the equation

$$\frac{n_1}{N} = \frac{D_1}{d_1}$$

or
$$\frac{900}{150} = \frac{18}{d_1},$$

whence
$$d_1 = \frac{150 \times 18}{900} = 3 \text{ in.}$$

To find D_2 and d_2 substitute in equation (30) the values of D_1, d_1 and C,

whence
$$\frac{\pi}{2}(18 + 3) + \frac{(18 - 3)^2}{4 \times 24} = \frac{\pi}{2}(D_2 + d_2) + \frac{(D_2 - d_2)^2}{4 \times 24}$$

and
$$\frac{n_2}{N} = \frac{D_2}{d_2}, \quad \text{whence } \frac{450}{150} = \frac{D_2}{d_2} \text{ or } D_2 = 3\,d_2.$$

Substituting this value for D_2 and solving,

$$d_2 = 5.43 \text{ in.} \qquad D_2 = 16.29 \text{ in.}$$

Similarly,
$$\frac{\pi}{2}(18 + 3) + \frac{(18 - 3)^2}{4 \times 24} = \frac{\pi}{2}(D_3 + d_3) + \frac{(D_3 - d_3)^2}{4 \times 24}$$

and
$$\frac{n_3}{N} = \frac{D_3}{d_3}, \quad \text{whence } \frac{75}{150} = \frac{D_3}{d_3} \text{ or } d_3 = 2\,D_3,$$

Substituting and solving,

$$D_3 = 7.38 \text{ in.} \quad \text{and} \quad d_3 = 14.76 \text{ in.}$$

The proportion chosen in the data for Example 10 gives an extreme case, and it will be noticed that even here the amount that $D_2 + d_2$ varies from $D_1 + d_1$ is only about $\frac{3}{4}$ in. and the variation of $D_2 + d_3$ is a trifle less than $1\frac{3}{16}$ in. These quantities are large enough to affect the tightness of the belt and must, therefore, be taken into account. In ordinary cases, however, where the distance between centers is much larger than in Example 10 and where the speed ratios are not so great the value of $D_x + d_x$, as obtained from Eq. (30) by the method just illustrated, differs but very little from $D_1 + d_1$ and this difference can usually be neglected.

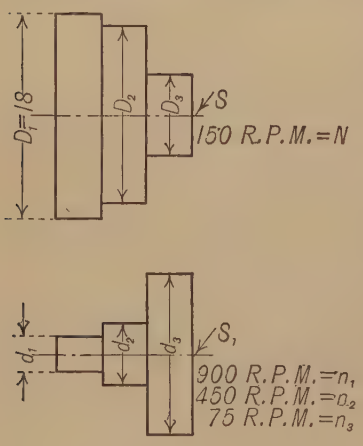

FIG. 34

57. Equal Stepped Pulleys. It is common practice, when convenient, to design a pair of stepped pulleys in such a way that both pulleys have the same dimensions and can, therefore, be cast from the same

pattern. This condition imposes certain restrictions on the speed ratios as may be seen from the following:

Referring to Fig. 35 if the pulleys are alike,

$$D_1 = d_5,\ D_2 = d_4,\ D_3 = d_3,\ D_4 = d_2,\ D_5 = d_1.$$

As in previous discussions,

$$\frac{n_1}{N} = \frac{D_1}{d_1}$$

and

$$\frac{n_5}{N} = \frac{D_5}{d_5},$$

but

$$\frac{D_5}{d_5} = \frac{d_1}{D_1}.$$

Therefore,

$$\frac{n_1}{N} = \frac{N}{n_5}. \qquad (31)$$

In a similar manner,

$$\frac{n_2}{N} = \frac{N}{n_4}$$

and

$$N = n_3.$$

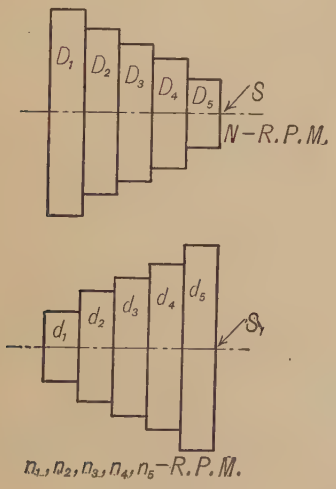

Fig. 35

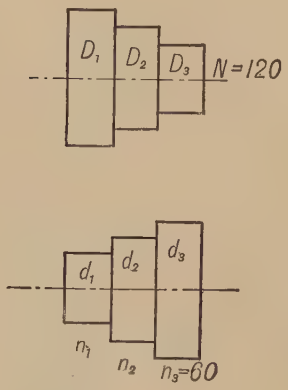

Fig. 36

That is: *When equal stepped pulleys are used the speeds of the driven shaft must be so chosen that the speed of the driving shaft is a mean proportional between the speeds of the driven shaft for belt positions symmetrically either side of the middle step.*

Example 11. A pair of equal three-stepped pulleys, Fig. 36, are to carry a belt to connect two shafts. The driving shaft makes 120 *r.p.m.*, and the lowest

speed of the driven shaft is 60 *r.p.m.* To find the other two speeds of the driven shaft.

$$\frac{n_1}{N} = \frac{N}{n_3}$$

or
$$\frac{n_1}{120} = \frac{120}{60}.$$

Therefore
$$n_1 = 240,$$
$$n_2 = N = 120.$$

If the step diameters are to be calculated, it will be done by the methods explained in § 55 or § 56 according as the belt is crossed or open.

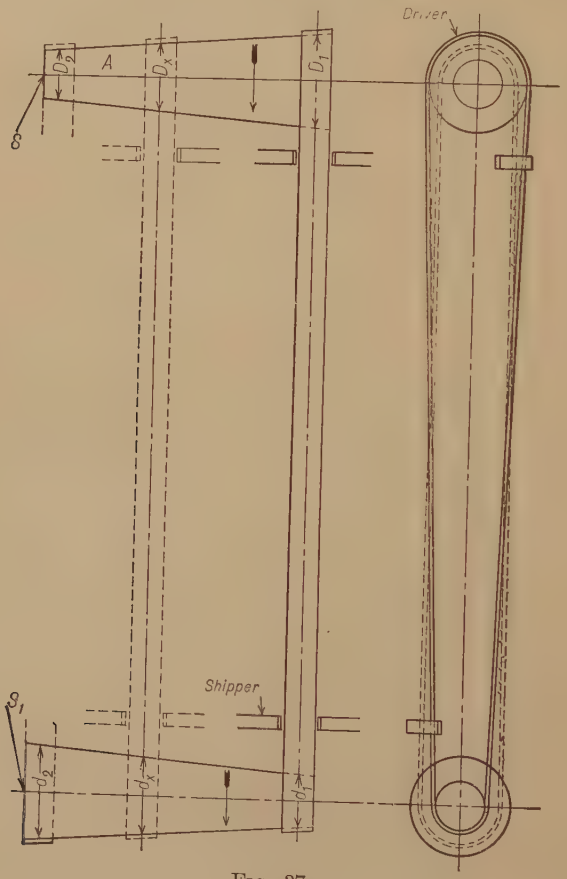

FIG. 37

58. Speed Cones. In some cases instead of stepped pulleys, pulleys which are approximately frusta of cones are used, as shown in Fig. 37. Here the working diameters of the pulleys, as D_x and d_x for any belt position, are measured at the middle of the belt. To design

such a pair of pulleys a series of diameters D_1, D_2, D_3, etc. (Fig. 38), may be calculated in the same way as steps and plotted at equal distances (a) apart, then a smooth line drawn through their ends, as shown. The length (a) does not affect the problem except as it makes the cone longer or shorter. The contours may be straight lines as in Fig. 38, giving cones, or curves as in Fig. 39, giving conoids.

When cones are used, a *shipper* must guide each part of the belt just at the point where it runs on to the pulley (see Fig. 37); otherwise the belt will tend to climb toward the large end of each pulley. Both shippers must be moved simultaneously when the belt is shifted.

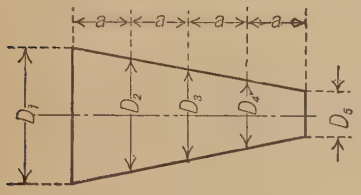

FIG. 38

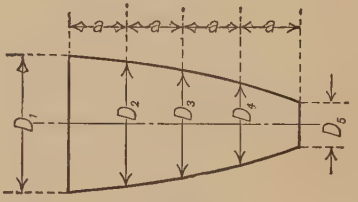

FIG. 39

59. Belt Connections between Shafts which are not Parallel. Non-parallel shafts may be connected by a flat belt with satisfactory results, provided the pulleys are so located as to conform to a fundamental principle which governs the running of all belts, namely: The point where the pitch line of the belt leaves a pulley must lie in a plane passing through the center of the pulley toward which the belt runs. In other words, a plane through the center of the receiving pulley, perpendicular to the pulley axis, must, if produced, include the delivering point of the pulley from which the belt is running. This may be seen by a reference to Fig. 40. In this case the shafts S and T are intended to turn in the directions indicated by the arrows. Considering *Elevation A*, the pitch line of the belt leaves the pulley M at the point a. If the pulley N is in such a position on the shaft T that a plane through the middle of its face contains the point a, the belt will run properly on to pulley N. XX is the trace of this plane and evidently contains point a. Similarly, in *Elevation B*, the pitch line of the belt leaves the pulley N at b_1 and M is so located on shaft S that a plane YY through the middle of its face contains b_1.

Fig. 41 shows the proper relative position of the pulleys if the direction of turning of shaft S is the reverse of that in Fig. 40. Other changes in the directions of rotation of either pulley would necessitate corresponding changes in the relative positions.

Both Figs. 40 and 41 show the pulleys at 90° with each other. The belt would run equally well if the pulleys were turned at any angle about XX as an axis.

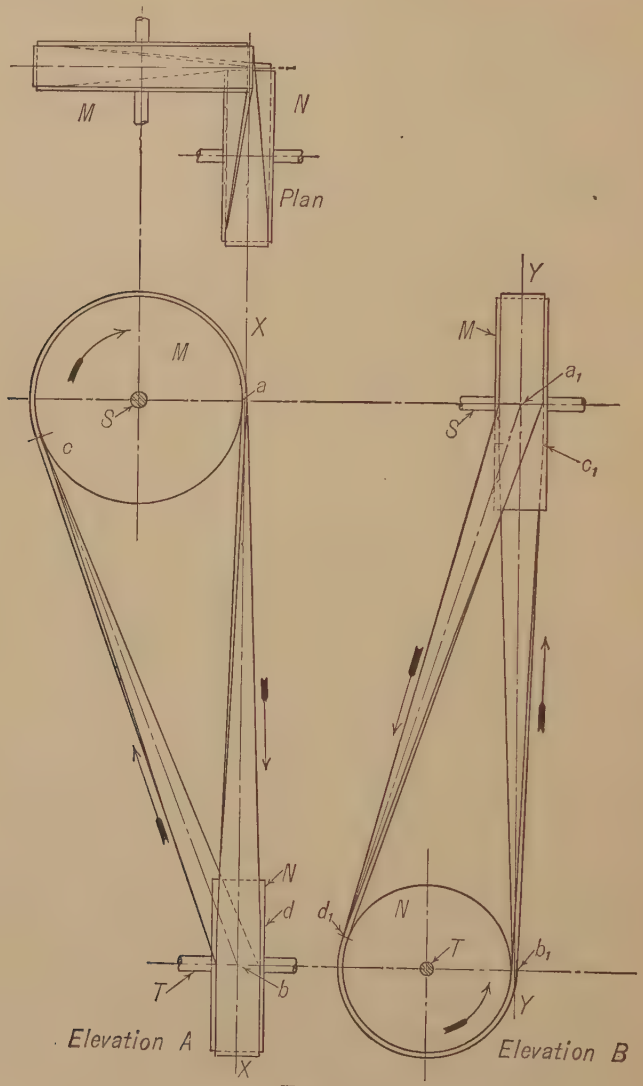

Fig. 40

60. Quarter-turn Belt. A belt which connects two non-intersecting shafts at right angles with each other, similar to those in Figs. 40 and 41, is called a **quarter-turn** belt. Emphasis should be laid on the fact that, for any given setting of the pulleys, the shafts must always

turn in the direction in which they were designed to turn. If the direction of rotation is changed without resetting the pulleys, the belt will immediately leave the pulleys. For this reason simple quarter-

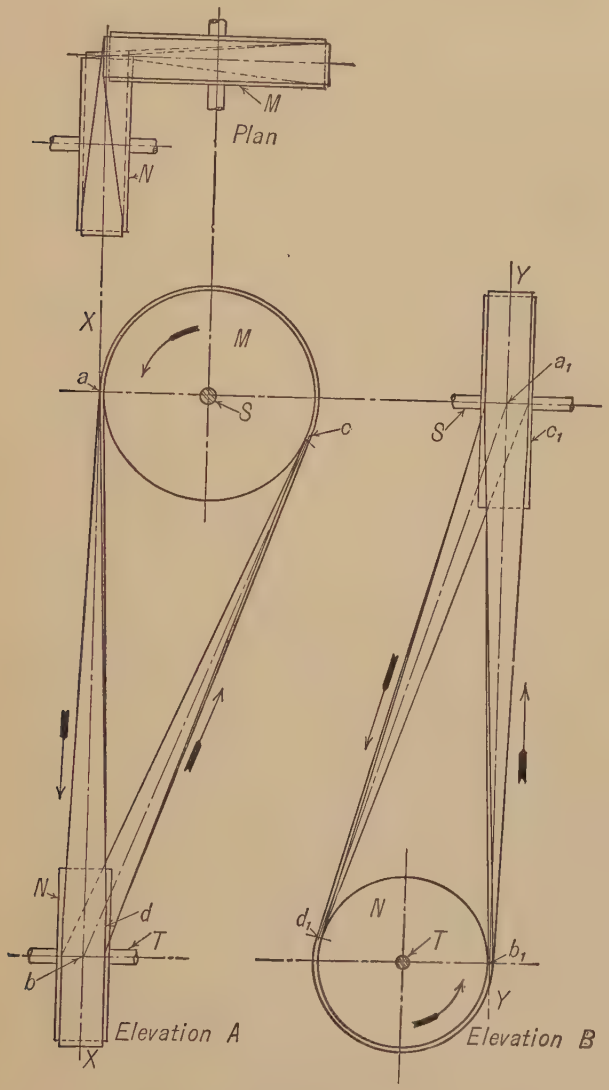

Fig. 41

turn belts like those illustrated above are likely to give trouble if used in places where there is possibility of the shafting turning backwards even a small fraction of a turn. If this should happen to a

small belt, it could easily be replaced on the pulleys; in the case of a large belt, however, the replacing would be more difficult.

61. Reversible Direction Belt Connection between Non-parallel Shafts — Guide Pulleys. If the connection between two non-parallel shafts is to be such that the shafting may run in either direction and still have the pulleys deliver the belt properly, in accordance with the fundamental law already explained, it is necessary to make use of intermediate pulleys to guide the belt into the proper plane. Such pulleys are called **guide pulleys.**

62. Examples of Belt Drives — Method of Laying Out. The following examples will illustrate a few of the types of belt drives which may occur and will give some idea of the method of procedure in designing such drives. Some of these examples are chosen from existing drives; others have been modified in order to illustrate the principles more clearly.

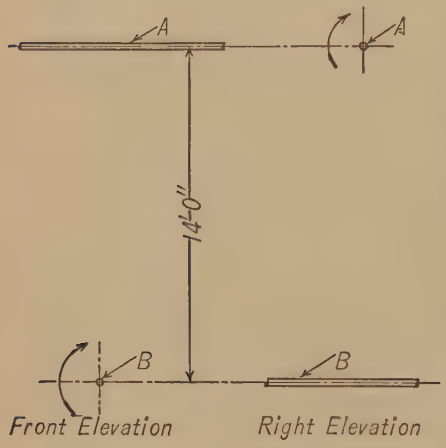

FIG. 42

Example 12. Given two shafts A and B located as shown in Fig. 42. Shaft A, carrying a 52-in. pulley, is to drive a 60-in. pulley on shaft B by means of a 12-in. double belt. Two guide pulleys 30 ins. diameter in line with each other are to be located on two horizontal shafts so that the direction of rotation may be reversed without the belt running off. When turning in the direction indicated by the arrows, the tight side of the belt is to run direct from the driven to the driving pulley in a vertical line, the loose side returning around the guide pulleys. The guide pulley which receives the belt from the upper main pulley is to be on a shaft whose center is 9 ft. below the center of A; the other guide pulley is to be on a shaft whose center is 2 ft. 6 in. below the center of A. Main pulleys 16-in. face, guide pulleys will be drawn the same width as the belt although in practice they would be wider.

To draw two elevations and a plan.

Solution. Referring to Fig. 43, first draw the center line YY_1 which is the center line through the shaft B. At a distance of 14 ft. above YY_1 draw XX_1 as the center line of shaft A. At any convenient place near the left end of YY_1 choose the point B_L as the center point of shaft B for the left elevation. With B_L as a center draw a circle 60-ins. diameter which will be the left elevation of the pulley on B. Next, draw the vertical line TT_1 tangent to this pulley on the side which is moving upward. TT_1 is the pitch line of the tight part of the belt and must be contained in the center plane of the pulley on A. With TT_1 and XX_1 as center lines, draw the rectangle 1–2–3–4 of length equal to the diameter of the pulley on A and width equal to the width of face of the same pulley. This rectangle is the side view or

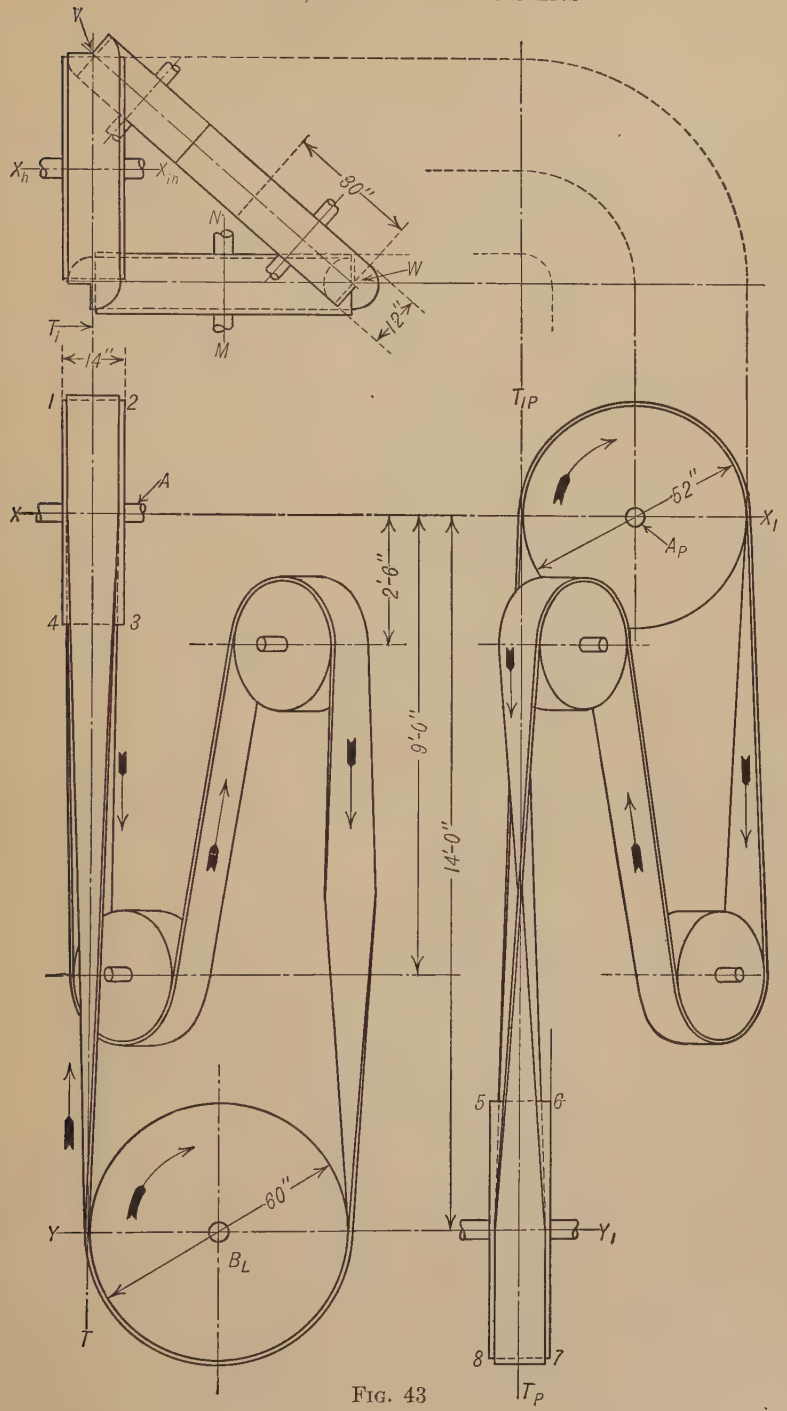
Y
X_h
X_{in}
N
80"
W
12"
M
T_i
14"
1
2
A
X
4
3
T_{IP}
52"
A_P
X_1
2'-6"
8'-0"
14'-0"
5
6
60"
B_L
Y
Y_1
T
8
7
T_P

FIG. 43

left elevation of the upper or driving pulley. Next, choose a point A_P near the right end of XX_1 and draw the end view or right elevation of this pulley. The vertical line $T_{1P}\,T_P$ drawn tangent to the upward moving or driving side of this pulley will be the right elevation of the driving or tight part of the belt and must be contained in the center plane of the driven pulley, since the direction of rotation is to be reversible. Therefore, the lines $T_{1P}\,T_P$ and YY_1 are the center lines for the rectangle 5–6–7–8 which is the right elevation of the driven pulley, TT_1 and $T_P\,T_{1P}$ are the two views of the line of intersection of the center planes of the pulleys.

The position of the two main pulleys with respect to each other has now been determined and the two elevations drawn. Their plan must next be drawn. This may be placed above either elevation, and is here placed above the left elevation. Looking down on the pulleys, both will appear as rectangles. The center line X_hX_{1h} may be drawn at any convenient distance above XX_1 and is the horizontal projection, or plan view, of the center line of the shaft A. The pulley on this center line can be projected directly up from the rectangle 1–2–3–4 and will, of course, have the same dimensions. The center line MN of the shaft B will be vertically above B_L and the rectangle which forms the plan view of the pulley on B will be located on this center line with its middle line passing through the front end of the plan of the other pulley. In other words, the plan view of these two pulleys is obtained by projecting from the two elevations in accordance with the ordinary principles of projections.

To draw the guide pulleys, first locate them in the plan. Their center plane will contain the line VW and one will have its contour passing through point V in plan while the contour of the other will pass through W. To draw the elevations, first draw the center lines at the specified distances below shaft A and then draw the ellipses which represent the pulleys by projecting from the plan.

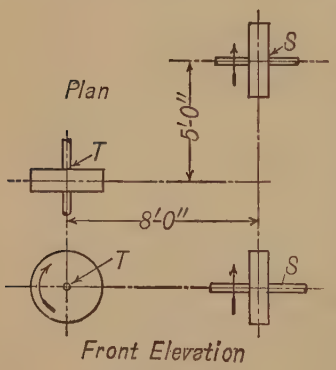

FIG. 44

Example 13. Shaft S (Fig. 44) drives shaft T by means of an 8-in. double belt. Both main pulleys 36 in. diameter located as shown. The usual direction of rotation to be as indicated by the arrows but the arrangement to be such that the directions may be reversed. Two 15-in. guide pulleys are to be placed on a vertical shaft to carry the belt between the two main pulleys. All pulleys 9 ins. face.

To draw the drive, making the elevations and a plan.

Solution. (See Fig. 45.) Draw the three views of the main shafts and pulleys, the plan and front elevation being the same as shown in Fig. 44, and the right elevation being constructed from these in accordance with the usual principles of projection. The left elevation might have been made instead of the right.

The position of the guide pulley shaft can best be determined from the plan. The planes of the pulleys A and B intersect in a line which, in plan, is projected as the point P and in the two elevations as the lines XY and X_1Y_1, respectively. Since the upper guide pulley is to deliver the belt to pulley B, it must be tangent to the line PM, and since, if the direction of rotation is reversed, C must be able to deliver the belt to pulley A it must be tangent to the line PN. The same reasoning will apply to the lower guide pulley. The center of the guide pulley shaft will, there-

fore, be at a point which is distant from PM and PN an amount equal to the radius of the guide pulleys. Since the pulleys A and B are of the same diameter and their axes on the same level, the guide pulley C will appear in the elevations with its center plane tangent to the tops of A and B, and D will have its center plane tangent to the bottoms of A and B. With this arrangement it is possible for either of

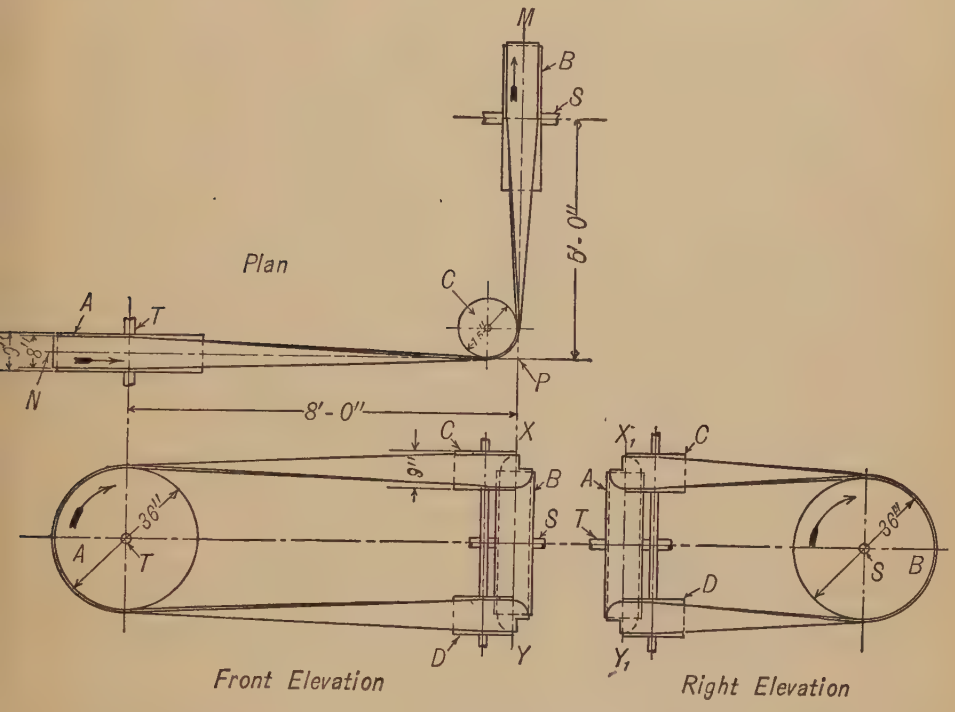

FIG. 45

the main pulleys to deliver the belt into the plane of either guide pulley, and either guide pulley may deliver to either main pulley.

It should be noticed that a drive like this, with both guides on the same vertical shaft, can be reversible in direction only when the main pulleys are of the same diameter. The next two examples show the construction when the main pulleys are of different diameters.

Example 14. Referring again to Fig. 44, assume the same conditions as for Example 13, except that the main pulleys are of different diameters. Suppose the pulley on T is 48-in. diameter and that on S 36-ins. diameter. The direction of rotation not to be capable of being reversed.

Solution. See Fig. 46. The three views of the main shafts and pulleys are drawn as in Example 13. The center of the guide pulley shaft is located in the plan at such a point that the pulley circumference will be tangent to the lines PM and PN as in Fig. 45. The position of the guide pulley C on this shaft is determined in the front elevation, it being at such a height that its center plane will be tangent to the

top surface (that is, contain the point of delivery K) of the pulley A which delivers the belt to C. Similarly, in the right elevation, the position of the guide pulley D is such that its center plane will be tangent to the lower surface (that is, will contain the point of delivery R) of the pulley B.

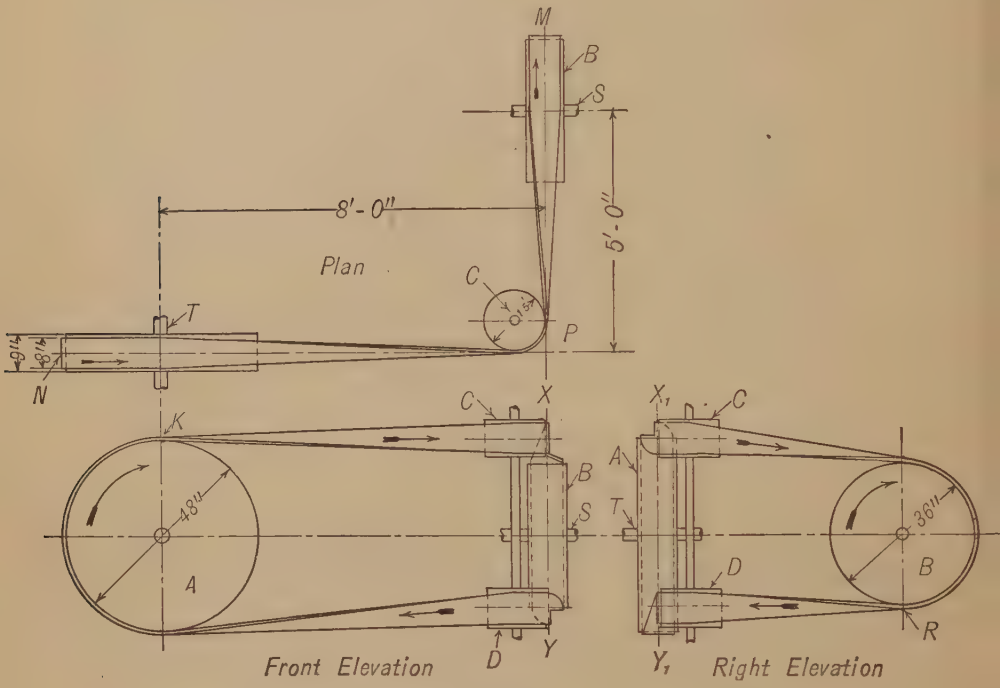

FIG. 46

Example 15. With the data the same as for Example 14, suppose it is required so to arrange the guide pulleys that the direction of rotation may be reversed. (They cannot in this case be on the same vertical shaft.)

Solution. See Fig. 47. After having drawn the three views of the main shafts and pulleys, the problem becomes one of so placing the guide pulleys that they will conduct the belt in either direction. There are a great many possible solutions of this problem, but that shown in Fig. 47 is the simplest.

In the front elevation the points a and b are the center points of the upper and lower contour elements of the pulley B. From a and b draw lines ae and bf tangent to pulley A. The center planes of the guide pulley C must contain the line ae and the center plane of the guide pulley D must contain the line bf. C will appear in this view, therefore, as a rectangle with one end passing through a and D will appear as a rectangle with one end passing through b. In the other views the edges of the guide pulleys will appear as ellipses, as shown.

Example 16. The shaft S, Fig. 48, is to drive the shaft T by means of an 8-in. belt running on pulleys A and B. One of the columns of the building makes it impossible to continue the shaft T far enough to place the pulley B in the proper posi-

tion relative to A to permit the use of a direct quarter-turn drive. Furthermore the vertical distance between the two shafts is too small to make such a drive practicable even if the column did not interfere. It is, therefore, necessary to employ guide pulleys to conduct the belt from B to A and from A back to B. The relative direc-

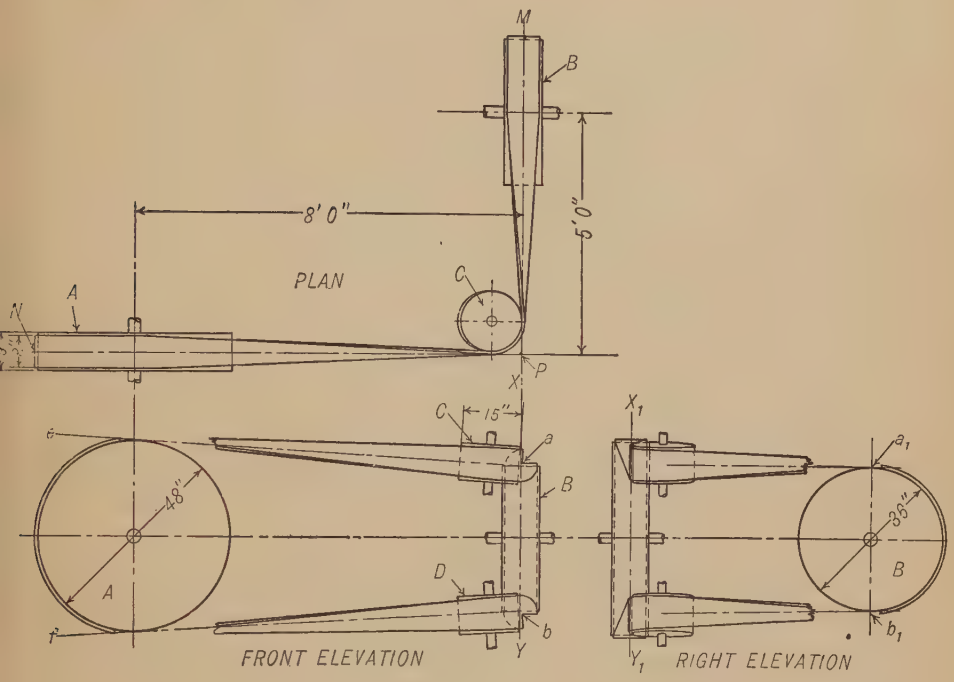

FIG. 47

tions of rotation are to be as shown and the guide pulleys are to be so located that the directions may be reversed. 18-in. guide pulleys will be used.

Solution. See Fig. 49. The positions of the guide pulleys are determined from the left elevation. From the center points a and b of the upper and lower contour lines of pulley A, lines ae and bf are drawn tangent to the pulley B. The center plane of one guide pulley C must contain the line ae and the pulley will appear in this view as a rectangle with one end passing through a. The center plane of the other guide pulley D must contain the line bf and the pulley will appear as a rectangle with one end passing through b. The guide pulleys will appear in the front elevation and in the plan with their edges ellipses, as shown. The two guide pulleys so nearly coincide in the plan that the lower one was omitted in the drawing.

It will be noticed that in all the preceding examples the same surface of the belt comes in contact with the main pulleys at all times. This is an important condition from a practical standpoint. Whenever practicable the same surface should run against the guide pulleys also.

Example 17. Given two shafts at right angles, located as shown in Fig. 50. Shaft A carries a 52-in. pulley which drives a 60-in. pulley on shaft B by means of

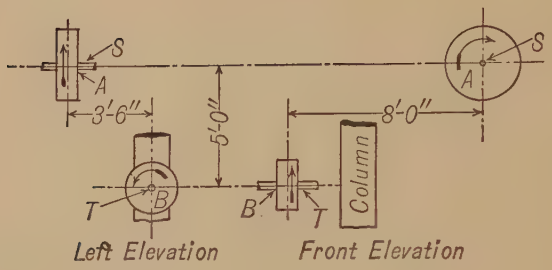
S
A
3'-6"
5'-0"
8'-0"
Column
T
B
Left Elevation
Front Elevation

FIG. 48

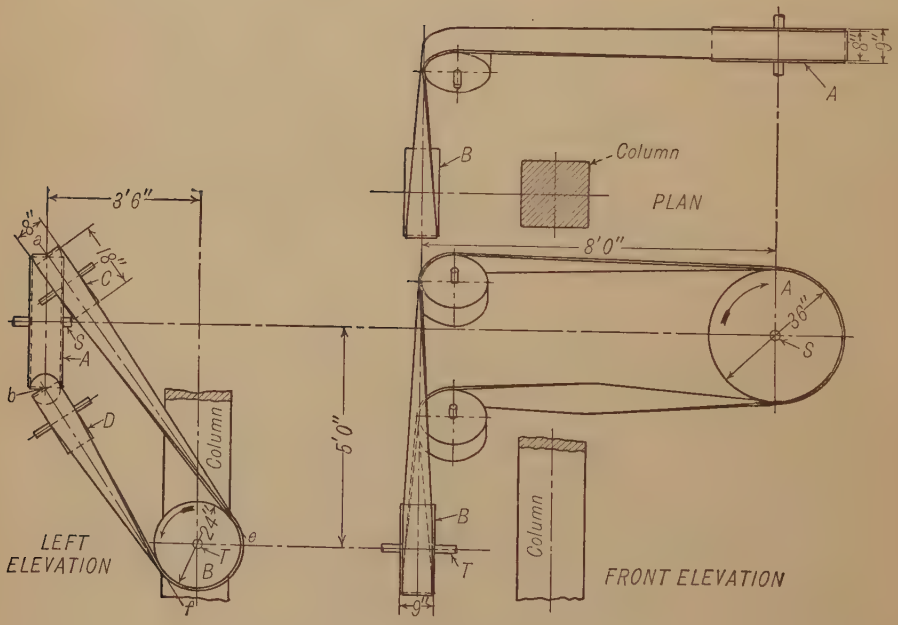
3'6"
18"
C
A
D
Column
5'0"
LEFT ELEVATION
B
T
PLAN
8'0"
Column
FRONT ELEVATION

FIG. 49

a double belt 12 ins. wide. The ordinary direction of rotation is as shown by the arrows. One guide pulley 30 ins. diameter is to be so located that the direction of rotation may be reversed without the belt running off. When turning in the direction shown, the tight side of the belt is to run direct from driven to driving pulley in a vertical line, the loose side returning around the guide pulley.

The main pulleys are 14 ins. wide. Two elevations and a plan are to be drawn.

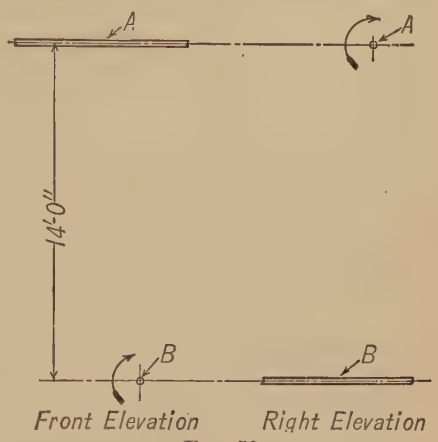

FIG. 50

Solution. It will be noticed that, except for the guide pulley, this problem is the same as Example 12 and the method of drawing the three views of the main pulleys is exactly as described for that case.

To draw the guide pulley proceed as follows: (See Fig. 51). The distance of this guide from either one of the main pulleys would be governed somewhat by convenience in actually setting up the bearings to support it, and partly also by the relative sizes of the main pulleys. It is desirable so to locate it as to give the least possible abruptness to the bend in the belt. In this case there has been selected a point C in the line of intersection of the two main pulley planes which is 6 ft. 6 ins. below the axis of the upper shaft. This point will be at C_L and C_P in the two elevations. From C_L draw a line tangent to the lower pulley at D_L and project across, getting the other view of this point at D_P. In a similar way draw a line from C_P tangent to the upper pulley at E_P and project across to find E_L. We now have the two projections of two lines CD and CE drawn from a point in the intersection of the pulley planes tangent to the two pulleys, and the guide pulley must be set in such a position that its center plane will contain these two lines. The problem then is to draw the projections of the guide pulley when so set. Either elevation may be drawn first; let us start with the left elevation. Here C_LD_L shows in its true length and the line CD itself may be considered as lying in the plane of the paper. The line CE has one end C_L in the plane of the paper while the line itself really slants down below the paper. The true size of the angle which it makes with the plane of the paper is equal to the angle $E_PC_PF_P$. D_LC_L is the trace, or line of intersection with the paper, of the plane containing CD and CE.

Now swing this plane up into the paper to get the true angle between CD and CE. To do this produce D_LC_L to the left and through E_L draw a line perpendicular to D_LC_L. From C_L with a radius equal to the true length of CE (that is, with radius C_PE_P) cut this perpendicular at E_1 and join E_1 to C_L. The angle $E_1C_LD_L$ is the true angle between the lines EC and DC. Set the compasses with a radius equal to the radius of the guide pulley and find by trial the center O_1 about which a circle of this radius may be drawn tangent to C_LE_1 and C_LD_L. This point shows the real position of the center of the middle circle of the guide pulley relative to the lines CE and CD. The next step is to revolve O_1 back to find its projection relative to C_LE_L and C_LD_L. To do this draw a line through E_1 and O_1 meeting C_LD_L at H_1; then join H_1 to E_L. Through O_1 draw a line perpendicular to D_LC_L meeting H_1E_L at O_L and C_LD_L at J_L. Then O_L is the projection of the center point of the pulley.

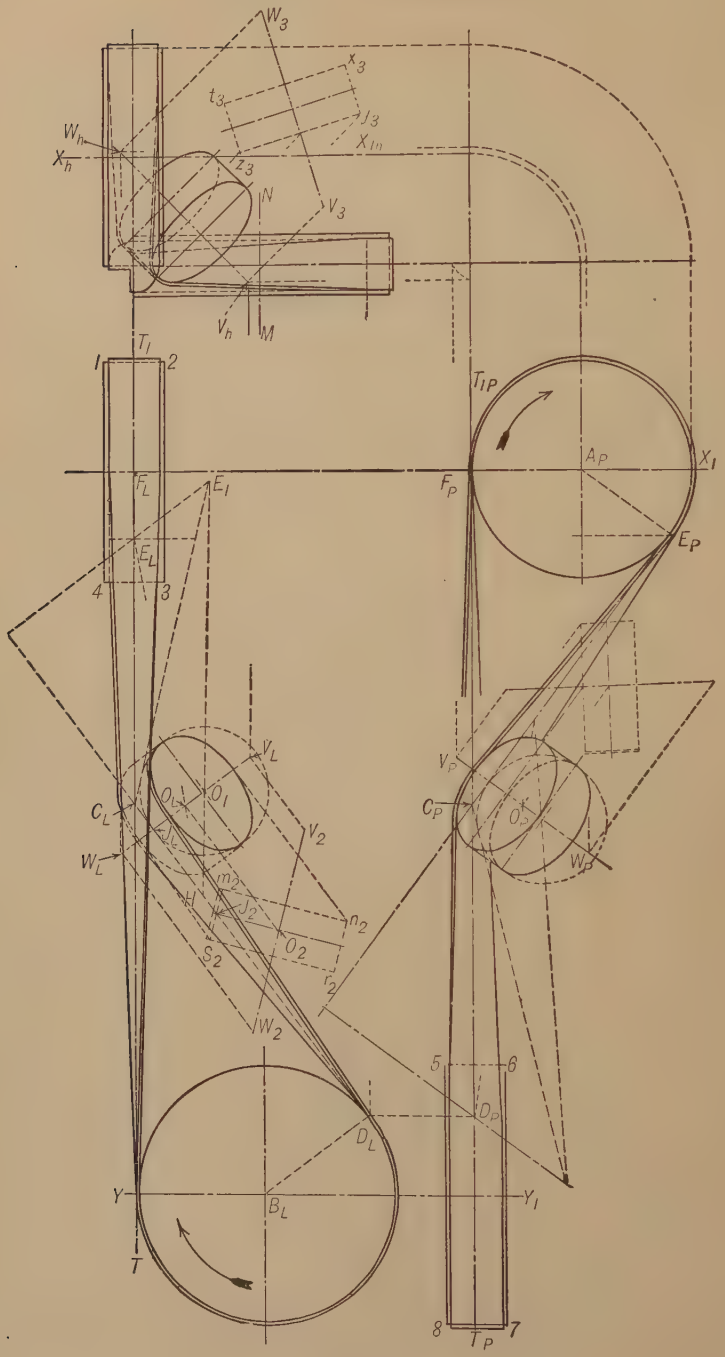

W_3
x_3
t_3
J_3
X_{1n}
W_h
X_h
z_3
N
V_3
V_h
M
T_1
1
2
T_{1P}
A_P
X_1
F_L
E_1
F_P
E_P
E_L
4
3
V_L
V_P
C_L
O_L
O_1
C_P
O_P
J_L
V_2
W_L
W_P
m_2
H
J_2
n_2
O_2
S_2
r_2
W_2
5
6
D_P
D_L
Y
B_L
Y_1
T
8
T_P
7

FIG. 51

To draw the projections of the edges of the pulley select any point as J_2 in the line $C_L D_L$, draw a line through O_L parallel to $C_L D_L$ and from J_2 with a radius equal to the radius of the guide pulley cut this line at O_2. Draw a line through J_2 and O_2, also a line V_2W_2 through O_2 perpendicular to J_2O_2. On these two lines as center lines construct the rectangle $m_2n_2r_2s_2$ of length equal to the diameter of the guide pulley and width equal to the width of face of the same. This rectangle is the side view of the guide pulley when revolved up into the plane of the paper, the line V_2W_2 being the center line of its shaft. The projection of the pulley consists of two equal ellipses with major axes equal to the diameter of the guide pulley and minor axes found by projecting the points m_2n_2 and s_2r_2 on to the line O_LJ_L, as shown. If a definite length V_2W_2 is chosen for the shaft, the projections of the ends of the shaft are found at V_L and W_L. The right elevation of the guide pulley and the axis of its shaft are found by a method exactly similar to that just described.

The plan view of the guide pulley is found by first finding the plan projections V_h and W_h of the two ends of the shaft by projecting up from the two elevations, then revolving this line V_hW_h over until it comes into the plane of the paper, as shown at V_3W_3. On this line is drawn the rectangle $t_3x_3y_3z_3$, representing the pulley, and the axes of the ellipses which constitute the plan view of the pulley are found by projecting the rectangle $t_3x_3y_3z_3$ on to V_hW_h, as shown.

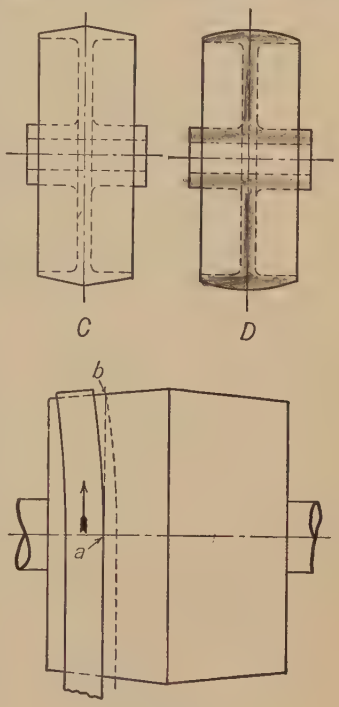

Fig. 52

63. Crowning of Pulleys. If a belt is led upon a revolving conical pulley, it will tend to lie flat upon the conical surface, and, on account of its lateral stiffness, will assume the position shown in Fig. 52. If the belt travels in the direction of the arrow, the point a will, on account of the pull on the belt, tend to adhere to the cone and will be carried to b, a point nearer the base of the cone than that previously occupied by the edge of the belt: the belt would then occupy the position shown by the dotted lines. Now if a pulley is made up of two equal cones placed base to base, the belt will tend to climb both, and would thus run with its center line on the ridge formed by the union of the two cones. In practice pulley rims are made slightly crowning, except in cases where the belt must occupy different parts of the same pulley.* In Fig. 52 two common forms of rim sections are shown at C and D; that shown at C is most commonly met with, as it is the easier

* The amount of crowning varies from about $\frac{1}{16}''$ on a pulley 5″ wide to about $\frac{1}{4}''$ on a pulley 30″ wide.

to construct. When pulleys are located on shafts which are slightly out of parallel, the belt will generally work toward the edges of the pulleys which are nearer together. The reason for this may be seen from Fig. 53. The pitch line of the belt leaves pulley A at point a. In order to contain this point the center plane of pulley B would have to coincide with XX_1. That is, the belt is delivered from A into the plane XX_1. Similarly, the belt is delivered from b, on the under side of pulley B, into the plane Y_1Y. The result of this action is that the belt works toward the left and tends to leave the pulleys.

64. Tight and Loose Pulleys are used for throwing machinery into and out of gear. They consist of two pulleys placed side by side upon the driven shaft CD (Fig. 54); A, the tight pulley, is keyed to the shaft; while B, the loose pulley, turns loose upon the shaft and is kept in place by the hub of the tight pulley and a collar. The driving shaft carries a pulley G, whose width is the same as that of A and B put together, or twice that of A. The belt, when in motion, can be moved by means of a *shipper* that guides its advancing side, either on to the tight or the loose pulley. The pulley G (Fig. 54) has a flat face, because the belt must occupy different positions upon it, while A and B have crowning faces, which will allow the shifting of the belt and will retain it in position when shifted upon them.

Fig. 53

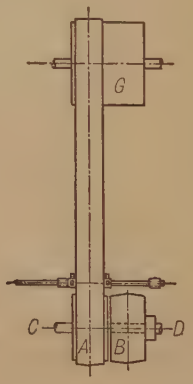

Fig. 54

65. Ropes and Cords. Power is often transmitted by means of ropes running over pulleys, called sheaves, having grooved surfaces. For large amounts of power inside of buildings the ropes are made of hemp or similar material. For long distance drives and drives which are exposed to the weather wire

ropes are used. For small amounts of power on machines, cords of cotton are common.

66. Systems of Driving with Hemp Rope. There are two distinct systems of rope driving, each of which has its advantages. One is

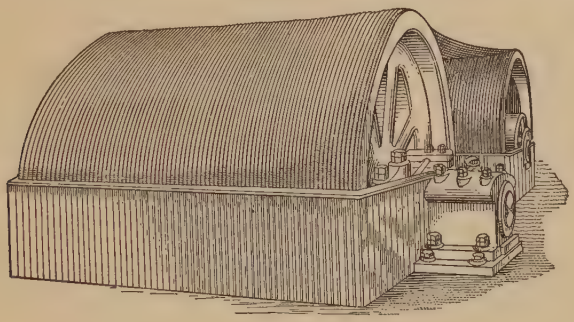

FIG. 55

the **Multiple Rope** or **English System.** This is the simpler of the two and consists of independent ropes running side by side in grooves on the pulleys. A large drive using this system is shown in Fig. 55.

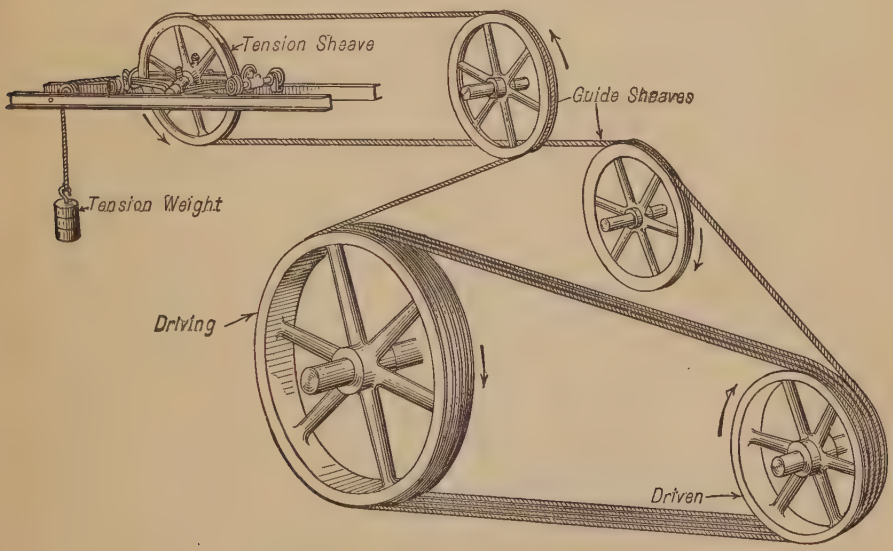

FIG. 56

The other system is the **Continuous** or **American System,** shown in Figs. 56 and 57. One rope is wound around the driving and driven pulleys several times, and conducted back from the last groove of one

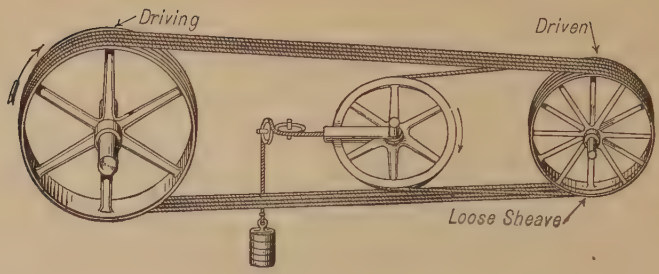

FIG. 57

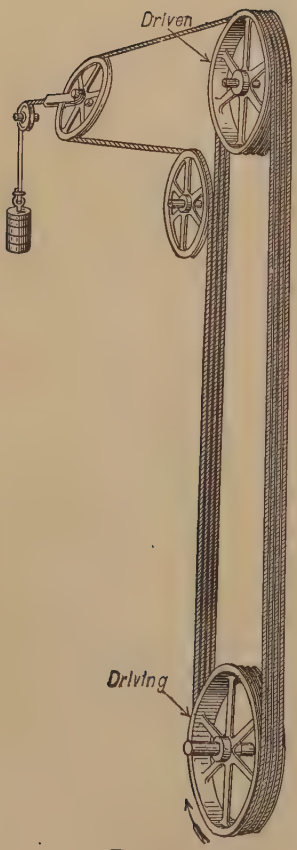

FIG. 58

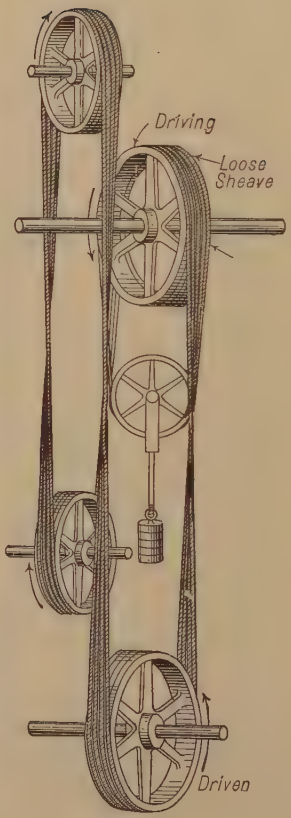

FIG. 59

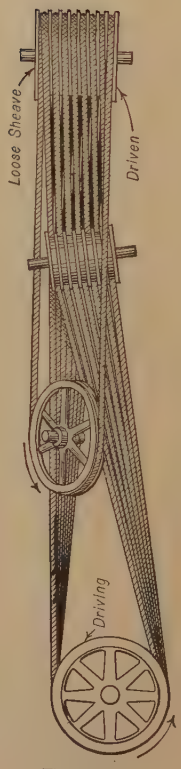

FIG. 60

pulley to the first groove of the other pulley by means of one or more intermediate pulleys which also serve the purpose of maintaining a uniform tension throughout the entire rope. The slack should be taken up on the loose side just off the driving sheave. There are two ways

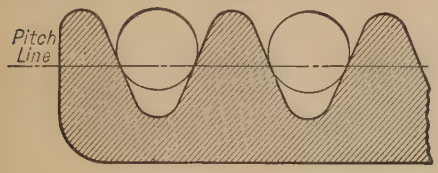

FIG. 61

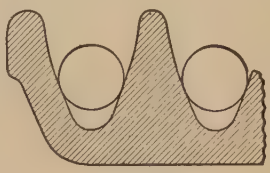

FIG. 62

of accomplishing this. *First* (see Fig. 56), the rope is conducted from an outside groove of the driver to the tension sheave and after passing around it is returned to the opposite outside groove of the driven sheave. *Second* (see Fig. 57), where it is inconvenient to take the slack directly from the driver the rope is passed around a loose sheave on the driven shaft, thence over the tension sheave, and is returned to the first groove in the driven sheave. Figs. 58, 59 and 60 show further examples.

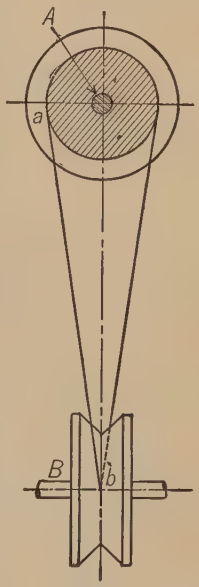

FIG. 64

67. Grooves for Hemp Rope. The shape and proportions of the grooves used on many pulleys for hemp rope depend somewhat upon the system used. Figs. 61 and 62 show two forms much used. Fig. 63 illustrates the groove used on idle wheels.

It will be noticed that the rope wedges into the grooves on the driving and driven pulleys, while on the loose or idle pulleys it rides on the bottom of the groove.

68. Small Cords are often used to connect non-parallel axes, and very often the directional relation of these axes must vary. The most common example is found in spinning frames and mules, where the spindles are driven by cords from a long, cylindrical drum, whose axis is at right angles to the axes of the spindles. In such cases, the common perpendicular to the two axes must be contained in the planes of the connected pulleys; both pulleys may be grooved, or one may be cylindrical, as in the example given above. Fig. 64 shows two grooved pulleys, whose axes are at right angles to each other, connected by a cord which can run in either direction, pro-

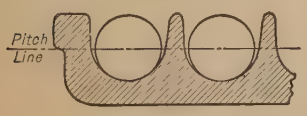

FIG. 63

vided the groove is deep enough. To determine whether a groove has sufficient depth in any case, the following construction (Fig. 65) may be used. Let AB and A_1B_1 be the projections of the approaching side of the cord; pass a plane through AB parallel to the axis of the pulley; it will cut the hyperbola CBD from the cone FEG, which forms one side of the groove. The cord will lie upon the pulley from B to I, where it will leave the hyperbola on a tangent. If the tangent at I falls well within the edge of the pulley at C, the groove is deep enough. It will usually be sufficient to draw a straight line, as ab (Fig. 64), and see that it falls well inside of the point corresponding to C in Fig. 65.

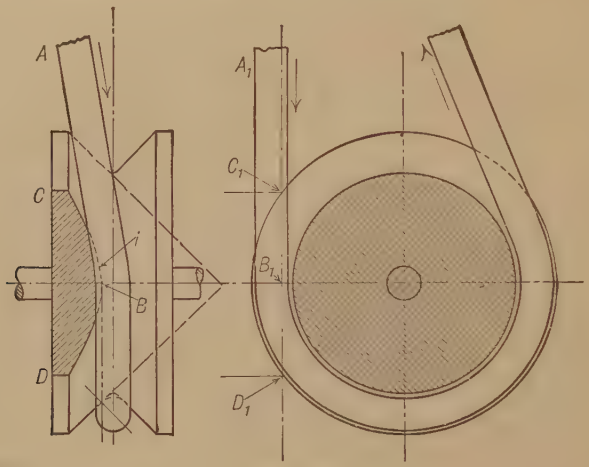

FIG. 65

69. Drum or Barrel. When a cord does not merely pass over a pulley, but is made fast to it at one end and wound upon it, the pulley usually becomes what is called a **drum** or **barrel.** A drum for a round rope is cylindrical and the rope is wound upon it in helical coils. Each layer of coils increases the effective radius of the drum by an amount equal to the diameter of the rope. A drum for a flat rope has a breadth equal to that of the rope, which is wound upon itself in single coils, each of which increases the effective radius by an amount equal to the thickness of the rope.

70. Wire Ropes. Wire rope is well adapted for the transmission of large powers to great distances, as for instance in cable and inclined railways. Its rigidness, great weight, and rapid destruction due to bending, however, unfit it for use in mill service, where the average speed of rope is about 4000 ft. per minute. As the easiest way to break wire is by bending it, ropes made of it, by any method

whatsoever, have proved unsatisfactory for drives of short centers and high speed unless the diameters of the sheaves are large enough to avoid bending the rope to strain it above the elastic limit.

Wire ropes will not support without injury the lateral crushing due to the V-shaped grooves; hence it is necessary to construct the pulleys with grooves so wide that the rope rests on the rounded bottom of the groove, as shown in Fig. 66, which shows a section of the rim of a wire-rope pulley. The friction is greatly increased, and the wear of the

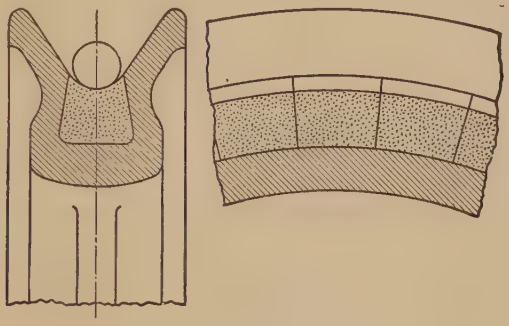

Fig. 66

rope diminished, by lining the bottom of the groove with some elastic material, as gutta-percha, wood or leather made up in short sections and forced into the bottom of the groove.

71. Chains are frequently used as connectors between parallel axes and also for conveying and hoisting machinery and for other similar purposes. The wheels over which chains run are called sprockets and have their surfaces shaped to conform to the type of chain used.

Chains may be classified as follows:

1° *Hoisting chains*

2° *Conveyor chains* { Detachable or Hook Joint; Closed Joint

3° *Power transmission chains* { Block; Roller; Silent

72. Hoisting Chains. The most common form of hoisting chain consists of solid oval links as shown in Fig. 67. The form of sprocket used for such a chain is evident from the figure.

73. Conveyor Chains may be of the detachable or hook joint type as shown in Fig. 68, or of the closed joint type illustrated in Fig. 69.

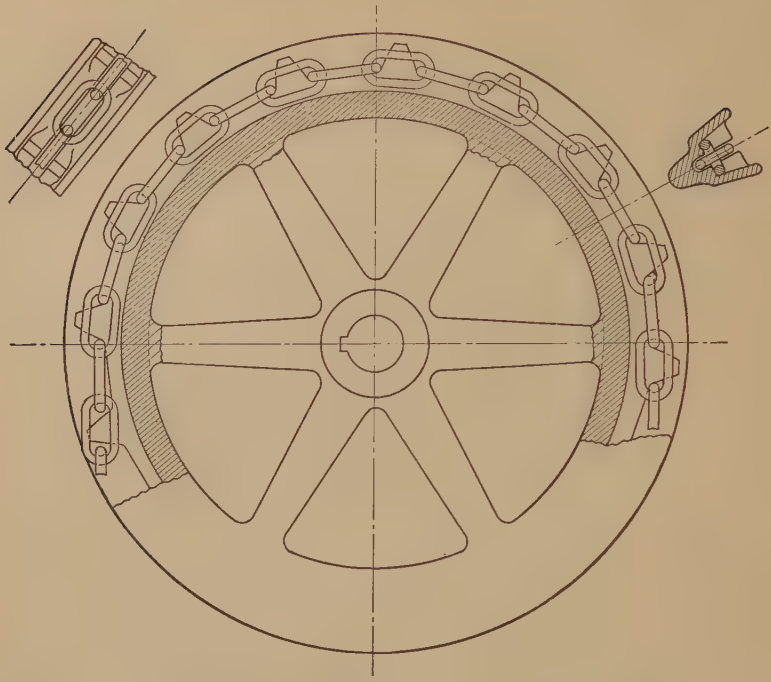

FIG. 67

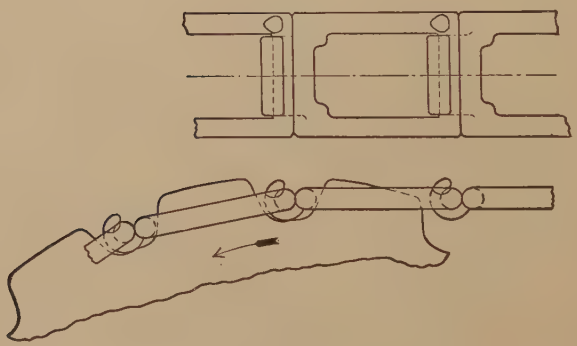

FIG. 68

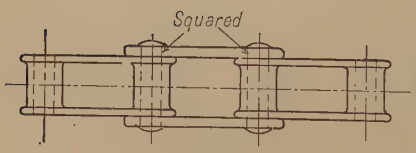

FIG. 69

FIG. 70

The design of the sprocket teeth is largely empirical, care being taken to have the teeth so shaped and spaced that the chain will run on to and off from the sprockets smoothly and without interference even after it has stretched or worn somewhat. Chains of this general class are often used for transmitting power at low speeds, as in agricultural machinery. They are usually made of malleable cast links and

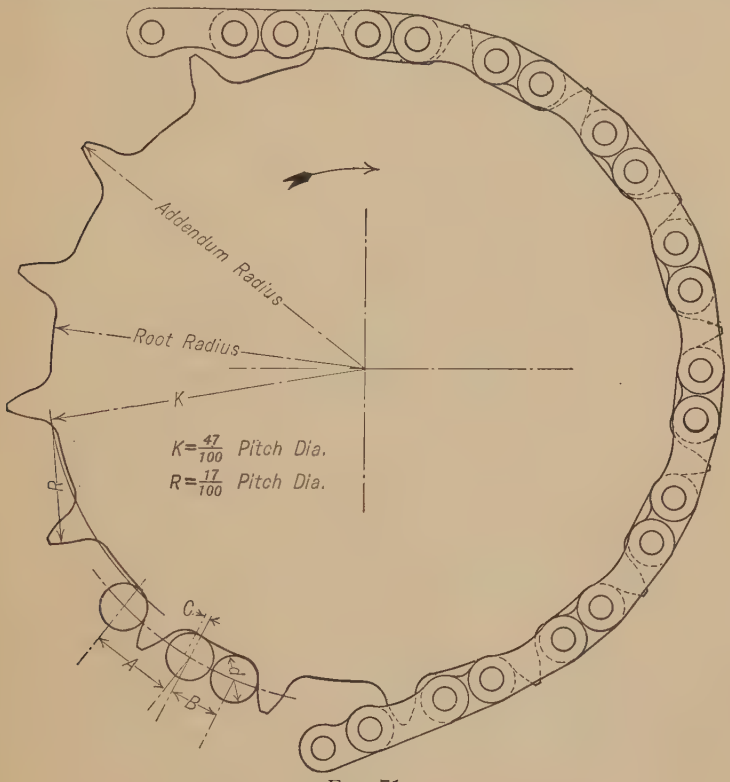

FIG. 71

do not have the smooth running qualities of the more carefully made chains.

74. Power Transmission Chains. This class includes the three types known as **block, roller** and **silent.** The chains are made of steel, accurately machined, with wearing parts hardened, and run on carefully designed sprockets. In the following discussion no attempt is made to give an exhaustive treatment of the subject, but merely to give some idea of the character of the three types and some of the points which need to be considered in their design.

75. Block Chains. Fig. 70 shows a block chain made by the Diamond Chain & Mfg. Co.

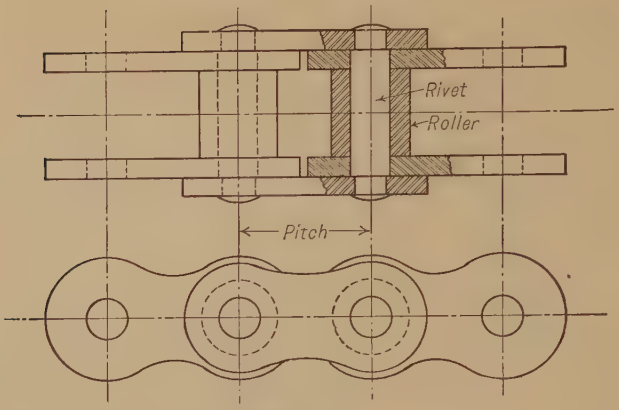

FIG. 72

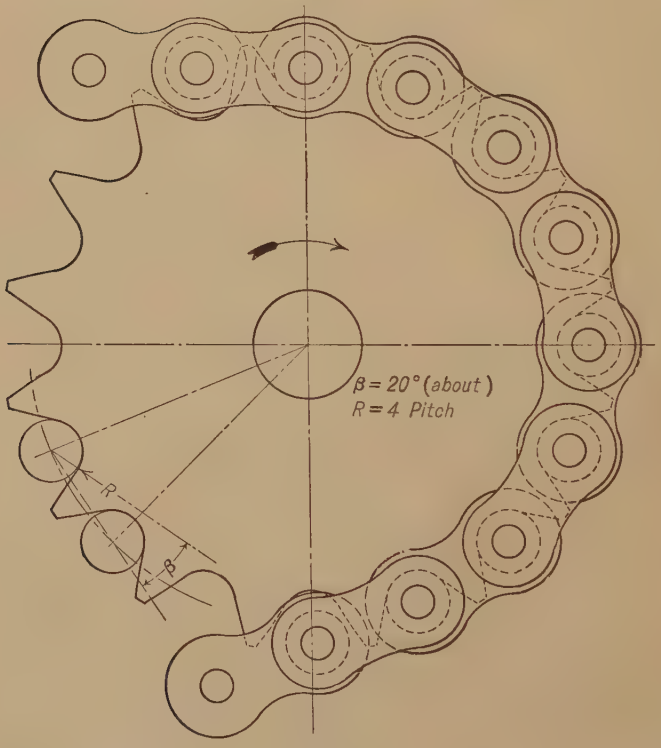

FIG. 73

Chains of the block type are less expensive to make than the roller or silent chains and are used for the transmission of power at comparatively low speeds. They are also used to some extent as conveyor chains and for other purposes in place of the malleable chains of class 2.

Fig. 71 shows a block chain in place on the driving sprocket. Attention is called to the way in which the links swing into position as they approach the sprocket and swing out as they leave. A method of laying out the sprocket teeth is indicated on the same figure. The proportions for the teeth here shown are those recommended by Mr. B. D. Pinkney in "Machinery," January, 1916.

76. Roller Chains. Fig. 72 illustrates a form of roller chain similar to one made by the Diamond Co., and Fig. 73 shows the same chain

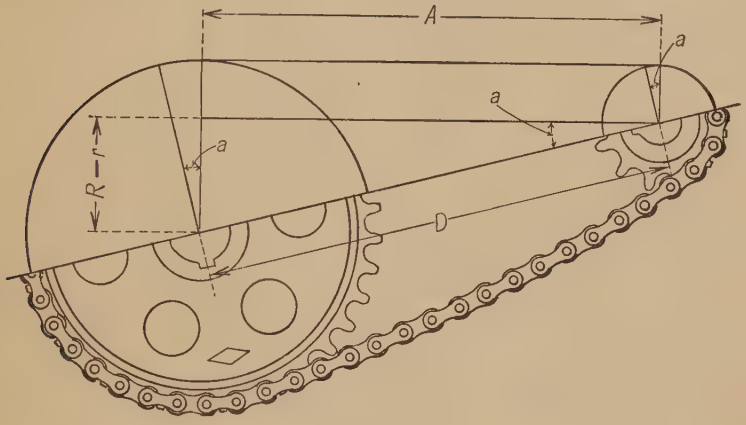

FIG. 74

in place on the sprocket. The method of laying out the sprocket teeth in Fig. 73 is the one recommended by the Diamond Co., for roller chain sprockets.

77. Calculations for Chain Length. This paragraph and the two following with Figs. 74, 75 and 76 are taken directly from "Power Chains and Sprockets" published by the Diamond Chain & Mfg. Co.

D = Distance between centers.
A = Distance between limit of contact.
R = Pitch radius of large sprocket.
r = Pitch radius of small sprocket.
N = Number of teeth on large sprocket.
n = Number of teeth on small sprocket.
P = Pitch of chain and sprocket.
$(180° + 2\,a)$ = Angle of contact on large sprocket.
$(180° - 2\,a)$ = Angle of contact on small sprocket.

$$a = \sin^{-1}\frac{R - r}{D},$$

$$A = D \cos a.$$

Total length of chain.

$$L = \frac{180 + 2\,a}{360} NP + \frac{180 - 2\,a}{360} nP + 2\,D \cos a. \tag{32}$$

78. Calculations for Diameters of Sprockets for Block Chains.

N = Number of teeth.
b = Diameter of round part of chain block (usually 0.325).
B = Center to center of holes in chain block (usually 0.4).
A = Center to center of holes in side links (usually 0.6).

$$a = \frac{180^\circ}{N}.$$

$$\text{Tan } B = \frac{\sin a}{\frac{B}{A} + \cos a}.$$

$$\text{Pitch diameter} = \frac{A}{\sin B}. \tag{33}$$

$$\text{Outside diameter} = \text{Pitch diameter} + b. \tag{34}$$

$$\text{Bottom diameter} = \text{Pitch diameter} - b. \tag{35}$$

In calculating the diameter of sprocket wheels, the bottom diameter is the most important.

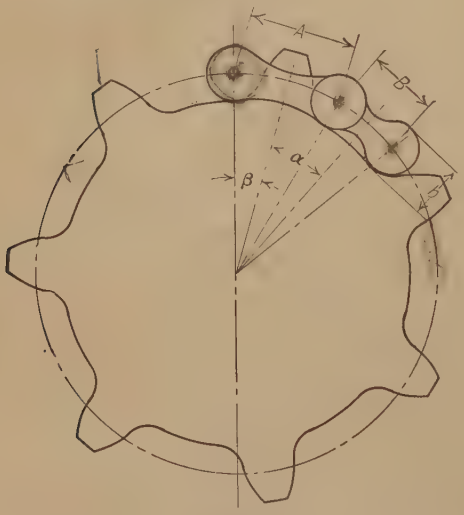

Fig. 75

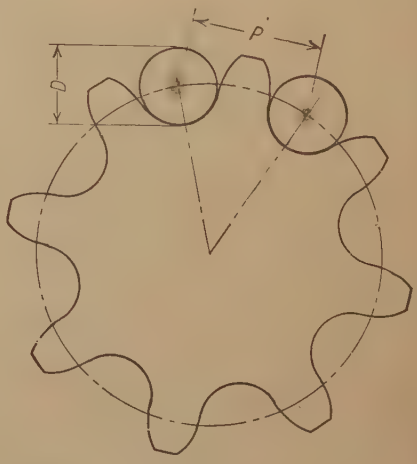

Fig. 76

79. Calculations for Diameters of Sprockets for Roller Chains. Referring to Fig. 76,

N = Number of teeth in sprocket.
P = Pitch of chain.
D = Diameter of roller.

$$a = \frac{180^\circ}{N}.$$

$$\text{Pitch diameter} = \frac{P}{\sin a}. \quad (36)$$

$$\text{Outside diameter} = \text{Pitch} + D. \quad (37)$$

$$\text{Bottom diameter} = \text{Pitch} - D. \quad (38)$$

80. Silent Chains. None of the above mentioned chains can be run at high speed without noise. There are now in use several makes of chains known as **Silent Chains** which run satisfactorily at high speeds and which adapt themselves to the sprocket after the pitch of the chain has increased due to wear. Two examples will serve to illustrate this type of chain.

81. Renold Silent Chain. Fig. 77 shows a chain developed by Hans Renold. It consists of links C of a peculiar form with straight

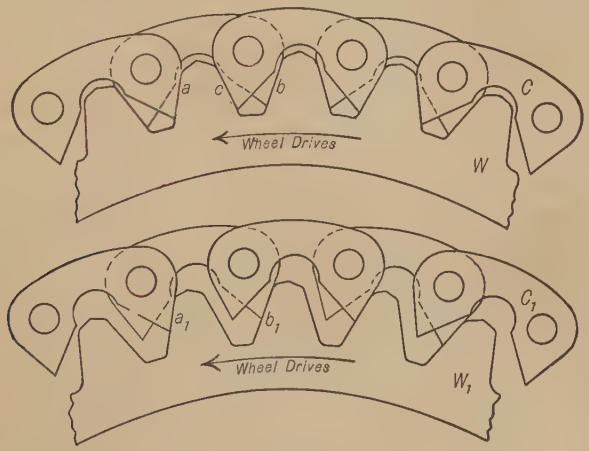

Fig. 77

bearing edges a, b, which run over cut sprocket-wheels with straight-sided teeth whose angles vary with the diameter of the wheel. The chain may be made any convenient width, the pins binding the whole together. One sprocket of each pair is supplied with flanges to retain the chain in place. The upper drawing shows a new chain in position on its sprocket, the bearing parts of the links being on the straight edges of the links only, not on the tops or roots of the teeth. The chain thus adjusts itself to the sprocket at a diameter corresponding with its pitch, and as any tooth comes into or out of gear there is neither

slipping nor noise. The lower figure shows the position taken by a worn chain of increased pitch on the same wheel.

82. Morse Rocker-Joint Chain. This chain (Fig. 78) eliminates the sliding friction of the rivets as the chain bends around the sprocket. Instead of the ordinary pin bearing a rocking bearing is provided at each joint. The following description, with slight changes, is taken from the catalogue of the Morse Chain Co. Two pins are employed at each joint; the left hand pin *a* is called the seat pin and the right hand pin *b* the rocker. Each is securely held in its respective end of the link. The seat pin has a plane surface against which the edge of the rocker pin rocks or rolls when the chain goes on and off the sprockets. The joint is so designed that the pressure due to tension of driving will be taken on a flat surface when in between the sprockets.

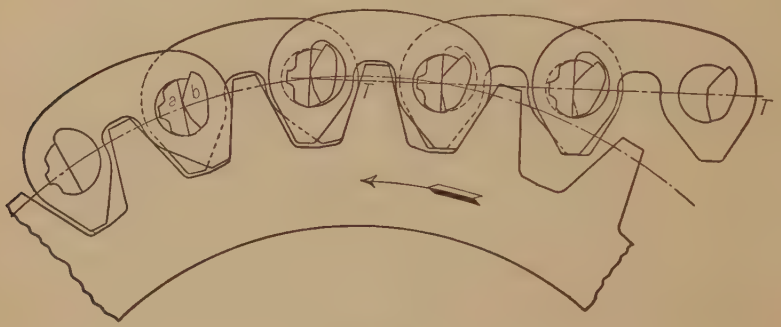

FIG. 78

Fig. 78 shows the chain on a driving sprocket running in the direction indicated by the arrows. The angle of the tooth to the line of the pull and any centrifugal force that may exist both tend to keep the link out to its true pitch diameter during the revolution of the wheel; it will fall below this point only when the pull of the slack side of the chain is greater than the forces in the opposite direction.

From this it will be seen that there are two forces definitely operative to keep the chain in its proper pitch contact with the wheels by causing it to assume a larger and larger circle as the chain lengthens in pitch; thus, the driving load continues to be distributed over a large number of teeth.

The climbing, which compensates for the increase of pitch, is gradual, easily noticed in the running drive, does not decrease the efficiency of the transmission, and, as the chain lengthens and approaches the top of the teeth, gives fair warning of the necessity of replacement or repairs of the chain.

CHAPTER IV

TRANSMISSION OF MOTION BY BODIES IN PURE ROLLING CONTACT

83. Pure Rolling Contact consists of such a relative motion of two lines or surfaces that the consecutive points or elements of one come successively into contact with those of the other in their order. There is no slipping between two surfaces which have pure rolling contact, that is, all points in contact have the same linear speed.

Two bodies may be rotating on their respective axes, so arranged that, by pure rolling contact, one may cause the other to turn with an angular speed bearing a definite ratio to the angular speed of the driver. This speed ratio may be constant or variable, depending upon the forms of the two bodies. The axes may be *parallel*, *intersecting*, or *neither parallel nor intersecting*.* The present chapter will consider the cases of parallel axes connected by cylinders giving constant speed ratio, intersecting axes connected by cones giving constant speed ratio and parallel axes connected by bodies of irregular outline, giving variable speed ratio.

The connection between non-parallel, non-intersecting axes will be discussed in connection with the subject of gearing.

84. Cylinders Rolling Together without Slipping. External Contact. In Fig. 79 let A be a cylinder fast to the shaft S and B a cylinder fast to the shaft S_1. Assume that the shafts are held by the frame so that their centers are at a distance apart just equal to the sum of the radii of the two cylinders; that is, $R + R_1 = C$. Then the surfaces will touch at P. Suppose also that the nature of the surfaces of the cylinders is such that, as they turn on their respective axes, there can be no slipping of one surface on the other. Then the surface speed of A must be equal to that of B, and A and B must turn in such directions relative to each other that the element on A which is in contact with B is moving in the same direction as the element on B which it touches. (Notice the arrows in the figure, the full arrows belonging together and the dotted arrows together.)

If A makes N *r.p.m.* and B makes N_1 *r.p.m.*,

Surface speed of $A = 2\pi RN$

and Surface speed of $B = 2\pi R_1 N_1$.

* In the case of axes which are neither parallel nor intersecting the coinciding elements of the rolling bodies may slide on each other in the direction of their length, so that the contact is not pure rolling in a strict sense.

Therefore, if the surface speed of A equals the surface speed of B,

$$2\pi RN = 2\pi R_1 N_1 \quad \text{or} \quad \frac{N}{N_1} = \frac{R_1}{R}. \tag{39}$$

Or, in other words, *the angular speeds of two cylinders which roll together without slipping are inversely proportional to the radii of the cylinders.*

It will be noticed that this principle is the same as that shown in the preceding chapter applied to cylinders connected by a belt or other flexible connector.

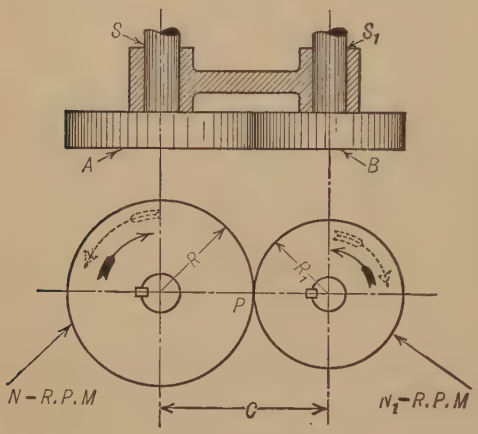

Fig. 79

85. Solution of Problems on Cylinders in External Contact. In Fig. 79 suppose C, N and N_1 are known; required to find the diameters of the two cylinders. From Eq. (39),

$$\frac{R}{R_1} = \frac{N_1}{N} \quad \text{or} \quad R = \frac{R_1 N_1}{N}.$$

It is known also that $R + R_1 = C$. R and R_1 can, therefore, be found by solving these as simultaneous equations.

The same result may also be found by a simple graphical construction as follows: Draw the line SS_1, Fig. 80, making its length equal to the distance between the centers of the shafts (corresponding to C, Fig. 79). This would, in most cases, have to be drawn at some reduced scale. From S draw a line SV, making any angle with SS_1. From S lay off the distances SK equal to N_1 linear units and KT equal to N linear units. The line ST is then divided into two parts SK and KT such that $\frac{SK}{KT} = \frac{N_1}{N}$. Now connect T with S_1 and from K draw a line parallel to TS_1, cutting SS_1 at P. Then, from the similar triangles SKP and STS_1, $\frac{SP}{PS_1} = \frac{SK}{KT} = \frac{N_1}{N}$. Therefore, SP will be the radius R and PS_1 the radius R_1.

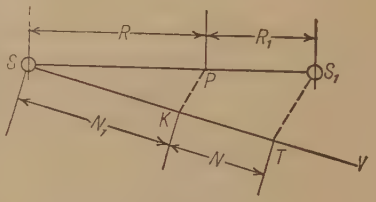

Fig. 80

Example 18. Two shafts A and B are 16 ins. on centers. A is to turn 50 times in a minute and B 150 times in a minute. What must be the size of the cylinders to connect them if they are to turn in opposite directions?

Calculation. From Eq. (39),

$$\frac{\text{Radius of } A}{\text{Radius of } B} = \frac{\text{Turns of } B \text{ per minute}}{\text{Turns of } A \text{ per minute}} = \frac{150}{50} = \frac{3}{1},$$

or,

Radius of $A = 3 \times$ radius of B.

Also

Radius of $A +$ radius of $B = 16$ ins.

Therefore,

Radius of $B = 4$ ins.

and

Radius of $A = 3 \times 4 = 12$ ins.

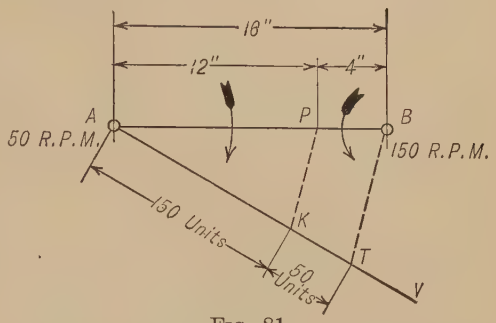

FIG. 81

Graphical Solution. In Fig. 81 draw the line AB equal to 16 ins. at some reduced scale.

From A draw the line AV at any angle. Lay off AK equal to 150 units. Lay off $KT = 50$ of the same units. Join T with B and draw KP parallel to TB. Then BP will be found to measure 4 ins. and AP 12 ins., making proper allowance for the scale at which AB was drawn.

Example 19. A cylinder 18 ins. diameter on a shaft A making 75 *r.p.m.* drives by rolling contact a cylinder on another shaft B, the second cylinder being $4\frac{1}{2}$ ins. diameter. How fast does B turn if the shafts turn in opposite directions?

Calculation.

$$\frac{r.p.m. \text{ of } B}{r.p.m. \text{ of } A} = \frac{\text{Diam. of cylinder on } A}{\text{Diam. of cylinder on } B} = \frac{18}{4\frac{1}{2}} = \frac{4}{1}$$

or

$$r.p.m. \text{ of } B = 4 \times r.p.m. \text{ of } A = 4 \times 75 = 300.$$

Graphical Solution. (Fig. 82.) Draw the line AB equal in length to the sum of the radii of the two cylinders $= \frac{18}{2} + \frac{4\frac{1}{2}}{2} = 11\frac{1}{4}$ ins.

On AB locate the point P 9 ins. from A (therefore $2\frac{1}{4}$ ins. from B). From B, the center of the cylinder whose speed is to be found, draw a line BV at any angle and lay off on this line BK equal to 75 units (that is, speed of A). Join K with P and through A draw a line parallel to PK cutting BV at T. Then the units in KT will show the speed of B.

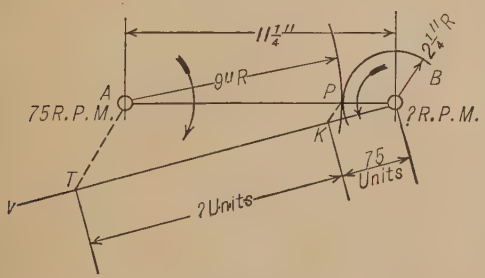

FIG. 82

86. Cylinders Rolling Together without Slipping. Internal Contact. In Fig. 83, where the lettering corresponds to that of Fig. 79, the cylinder A is hollow with B inside it, so that the contact is between the inner surface of A and the outer surface of B. This is called *internal contact*. The same mathematical reasoning will apply here as in Fig. 79, and Eq. (39) will hold true. The distance between centers now,

however, is equal to $R - R_1$ instead of $R + R_1$. The two cylinders in Fig. 83 will turn in the same direction instead of in opposite directions.

87. Solution of Problems on Cylinders in Internal Contact. In Fig. 83 if C, N and N_1 are known, to find the diameters of the cylinders.

From Eq. (39),

$$\frac{R}{R_1} = \frac{N_1}{N}.$$

It is also known that $R - R_1 = C$. These may be solved as simultaneous equations to find R and R_1, and therefore the diameters.

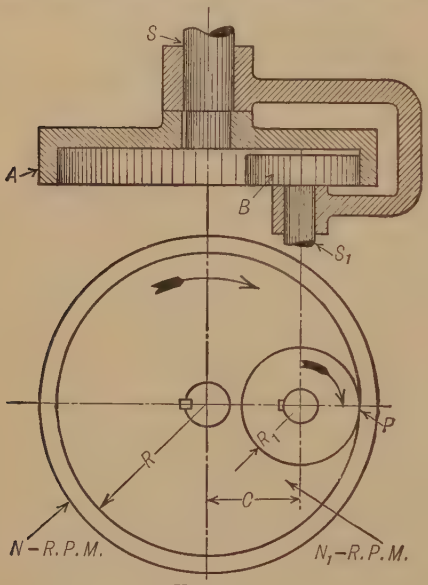

Fig. 83

The graphical solution of problems on cylinders rolling in internal contact is similar in principle to that shown in Fig. 80 for external contact. Fig. 84 shows the construction for internal contact.

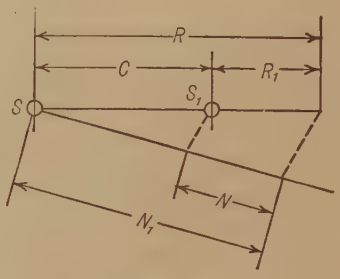

Fig. 84

Example 20. Two shafts A and B are 8 ins. on centers and are to be connected by rolling cylinders to turn in the same direction, A to make 20 *r.p.m.* and B to make 60 *r.p.m.* Find the diameters of the cylinders.

Calculation. From Eq. (39),

$$\frac{\text{Rad. } A}{\text{Rad. } B} = \frac{r.p.m.\ B}{r.p.m.\ A} = \frac{60}{20} = \frac{3}{1}$$

or $\quad \text{Rad. } A = 3 \times \text{rad. } B,$

also $\quad \text{Rad. } A - \text{rad. } B = 8 \text{ ins.}$

$\quad 3 \text{ rad. } B - \text{rad. } B = 8 \text{ ins.}$

or $\quad 2 \text{ rad. } B = 8 \text{ ins.}$

$\quad \text{Rad. } B = 4 \text{ ins.}$

and $\quad \text{Rad. } A = 3 \times \text{rad. } B = 3 \times 4 \text{ ins.} = 12 \text{ ins.}$

Graphical Solution. Fig. 85 shows the graphical solution for this problem.

Example 21. A cylinder 24 in. diameter on a shaft A making 60 *r.p.m.* drives by rolling contact a cylinder on another shaft B, the second cylinder being 6 in.

diameter. The shafts turn in the same direction. How fast does B turn and how far apart are the shafts?

Calculation. $$\frac{\text{Rev. } B}{\text{Rev. } A} = \frac{\text{Diam. cyl. on } A}{\text{Diam. cyl. on } B} = \frac{24}{6} = \frac{4}{1}.$$

$$R.p.m. \text{ of } B = 4 \times r.p.m. \text{ of } A = 4 \times 60 = 240 \; r.p.m.$$

and Dist. between centers = rad. A − rad. B

or Dist. between centers = 12 − 3 = 9 ins.

Graphical Solution. Fig. 86 shows the graphical solution of Example 21.

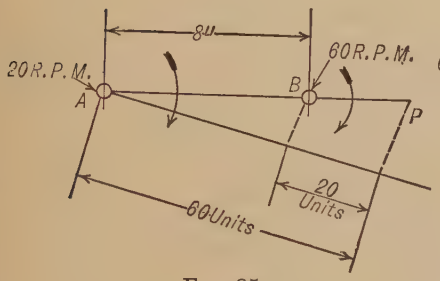

FIG. 85

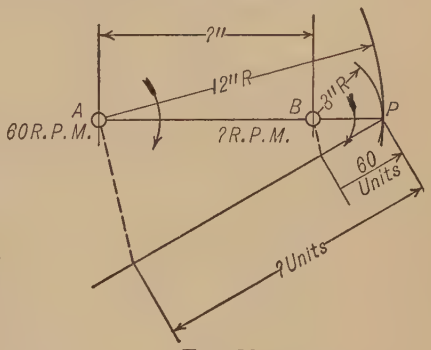

FIG. 86

88. Cones Rolling Together without Slipping. External Contact. In the preceding discussion relating to cylinders, the shafts were necessarily parallel. It is often necessary to connect two shafts which lie in the same plane but make some angle with each other. This is done by means of right cones as shown in Fig. 87 or frusta of cones as shown in Fig. 88, the cones having a common apex. The same reasoning applies to the ratio of speeds at the base of the cones as to the circles representing the cylinders in Fig. 79. That is,

$$\frac{N}{N_1} = \frac{R_1}{R}. \tag{40}$$

But $R_1 = OP \sin POC_1$ and $R = OP \sin POC$.

Therefore, $$\frac{R_1}{R} = \frac{OP \sin POC_1}{OP \sin POC} = \frac{\sin POC_1}{\sin POC}.$$

Substituting this expression in Eq. (40),

$$\frac{N}{N_1} = \frac{\sin POC_1}{\sin POC}.$$

Therefore, the angular speeds of two cones rolling together without slipping are inversely as the sines of the half angles of the cones.

89. Solution of Problems on Cones in External Contact. The law stated in the previous paragraph may be made use of to calculate the vertical angles of the cones when the angle between the axes and the speed ratio are known.

Referring to Fig. 88, let angle $COC_1 = \theta$,

$POC = \alpha$ and angle $POC_1 = \beta$.

Then $$\frac{N}{N_1} = \frac{\sin \beta}{\sin \alpha} = \frac{\sin \beta}{\sin (\theta - \beta)} = \frac{\sin \beta}{\sin \theta \cos \beta - \cos \theta \sin \beta}$$

$$= \frac{\dfrac{\sin \beta}{\cos \beta}}{\sin \theta - \cos \theta \dfrac{\sin \beta}{\cos \beta}} = \frac{\tan \beta}{\operatorname{Sin} \theta - \cos \theta \tan \beta}.$$

Whence $$\operatorname{Tan} \beta = \frac{\sin \theta}{\dfrac{N_1}{N} + \cos \theta}. \qquad (42)$$

In similar manner $$\operatorname{Tan} \alpha = \frac{\sin \theta}{\dfrac{N}{N_1} + \cos \theta}.$$

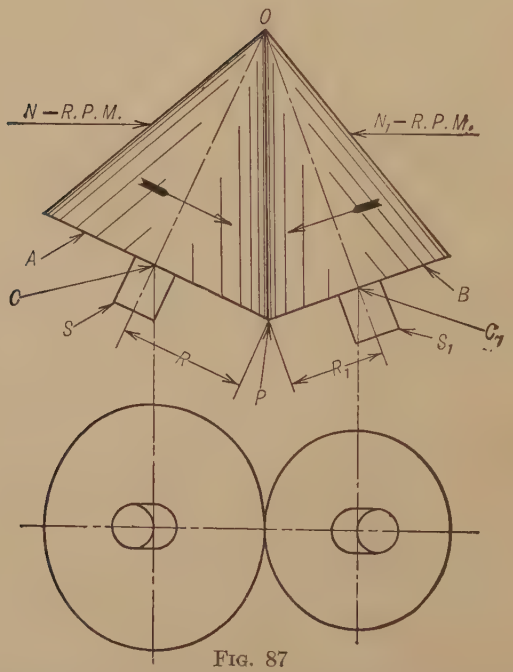

FIG. 87

Graphical Construction. In Fig. 89, S and S_1 are two shafts which are to be connected by rolling cones to turn as indicated by the arrows. Their center lines meet at O. S is to make N *r.p.m.* and S_1 is to make N_1 *r.p.m.* Required to find the line of contact of two cones which will connect the shafts, and to draw a pair of cones.

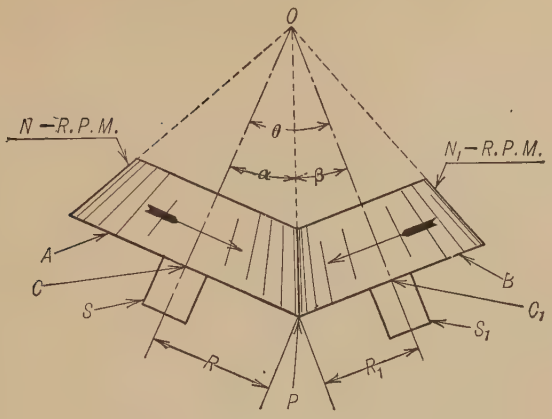
O
N – R.P.M.
θ
α
β
N1 – R.P.M.
A
C
S
B
C1
S1
R
R1
P

FIG. 88

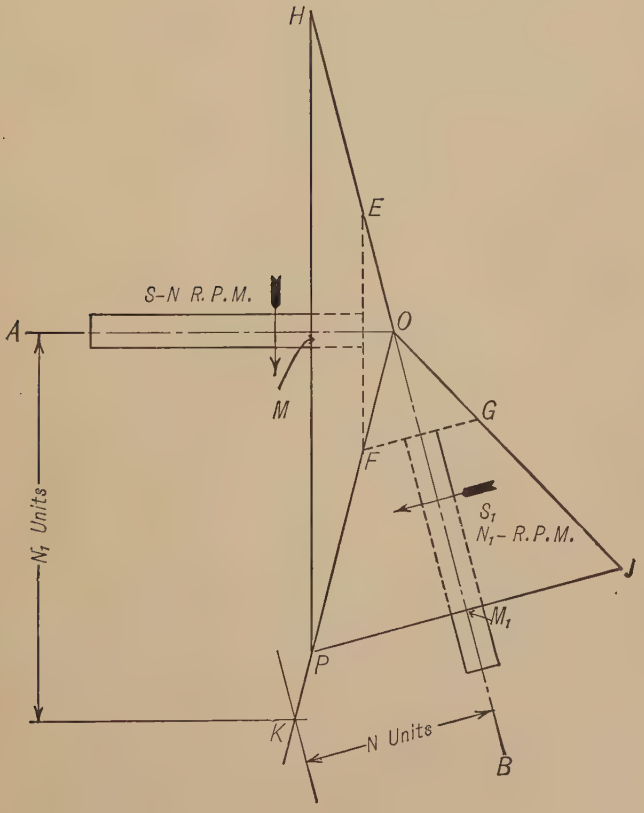
H
E
S–N R.P.M.
A
O
M
G
F
S1
N1 – R.P.M.
J
M1
N1 Units
P
K
N Units
B

FIG. 89

Draw a line parallel to OA, on the side toward which its direction arrow points, at a distance from OA equal to N_1 units. Draw a similar line parallel to OB, N units distant from OB. These two lines intersect at K. A line drawn through O and K will be the line of contact of the required cones. Select any point P on OK and from P draw lines perpendicular to AO and BO meeting AO and BO at M and M_1, respectively. Produce these lines, making $MH = MP$ and $M_1J = M_1P$. Draw HO and JO. Then OPH and OPJ are cones of the proper relative sizes to connect S and S_1 to give the required speeds.

If the point P had been chosen nearer to O, the cones would have had smaller diameters at their bases but the ratio of the diameters would have been the same, or, if P had been chosen farther away from O, the bases would have been larger but still of the same ratio. If frusta of cones are desired, the cones can be cut off anywhere, as shown by the dotted lines FE and FG.

Example 22. Two shafts S and S_1, Fig. 90, in the same plane, make an angle of 105° with each other. S is to turn 90 times per minute and S_1 30 times per minute. A cone on A having a base $\frac{3}{4}$ ins. diameter is to roll with a cone on B to give the required speeds; directions of rotation are to be as shown. To find the diameter of the base of the cone on B and to draw the cones.

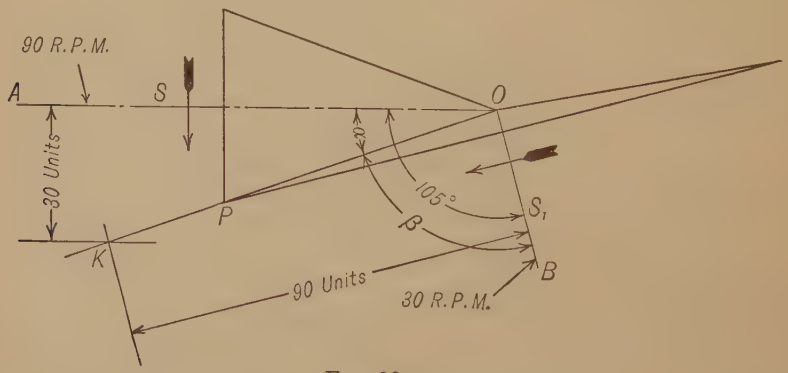

FIG. 90

Solution. Draw a line parallel to S 30 units distant from S, and a line parallel to S_1 90 units distant from S_1. These lines intersect at K; then KO is the element of contact. Since the base of the smaller cone is to be $\frac{3}{4}$ ins. diameter, find a point P on OK which is $\frac{3}{8}$ in. from S. Through this point draw the bases of the cones perpendicular to S and S_1 in the same way as explained for Fig. 89.

Calculation of Angles α and β.

Using Equation (42),

$$\text{Tan } \beta = \frac{\text{Sin } \theta}{\frac{N_1}{N} + \cos \theta},$$

where $\theta = 105°, \quad N_1 = 30, \quad N = 90,$

$$\text{Tan}\,\beta = \frac{0.9659}{\frac{3\,0}{9\,0} - 0.2588} = 12.9530.$$

$\therefore \quad \beta = 85°\ 25'$ nearly.

$2\,\beta = 170°\ 50'$ nearly = angle at apex of cone on S_1.

$\alpha = 105° - 85°\ 25' = 19°\ 35'.$

$2\,\alpha = 39°\ 10'$ = angle at apex of cone on S.

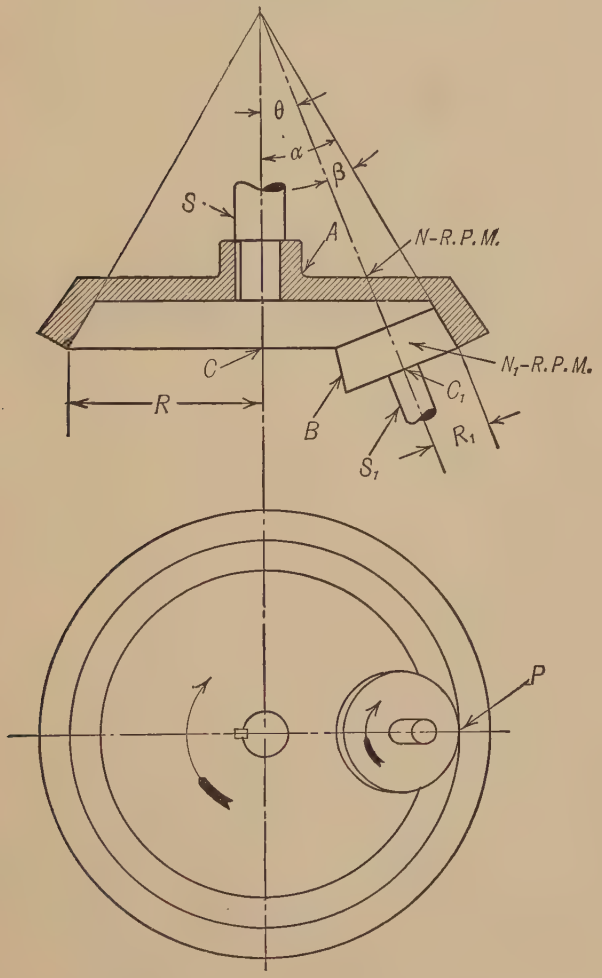

FIG. 91

90. Cones Rolling Together without Slipping. Internal Contact. The combination of speed ratio, directional relation, and angle between axes may be such as to require the cones to be arranged for internal

contact. This construction is not very often met in practice, but the necessity for it sometimes occurs and it is well to be familiar with the problem. Fig. 91 shows the principle involved. Corresponding points are lettered the same as in Fig. 87, and the same equations apply for finding the ratio of speeds of the two shafts.

It is not always possible to predict from given conditions whether the contact will be external or internal.

91. Solution of Problems on Cones Rolling in Internal Contact. The same general methods apply to solution of problems on cones in internal contact as in the case of external contact. It should be noted, however, that since $\theta = \alpha - \beta$ the equation corresponding to Equation (42) becomes

$$\operatorname{Tan}\beta = \frac{\operatorname{Sin}\theta}{\frac{N_1}{N} - \cos\theta}. \tag{43}$$

Example 23. The axes of two shafts S and S_1 intersect at an angle of 45°. S makes 15 *r.p.m.* and S_1 makes 60 *r.p.m.* The shafts are to be connected by two cones rolling together without slipping. The connection to be such that each turns as shown by the arrows. To draw the outline of the cones and calculate the angles at the apices.

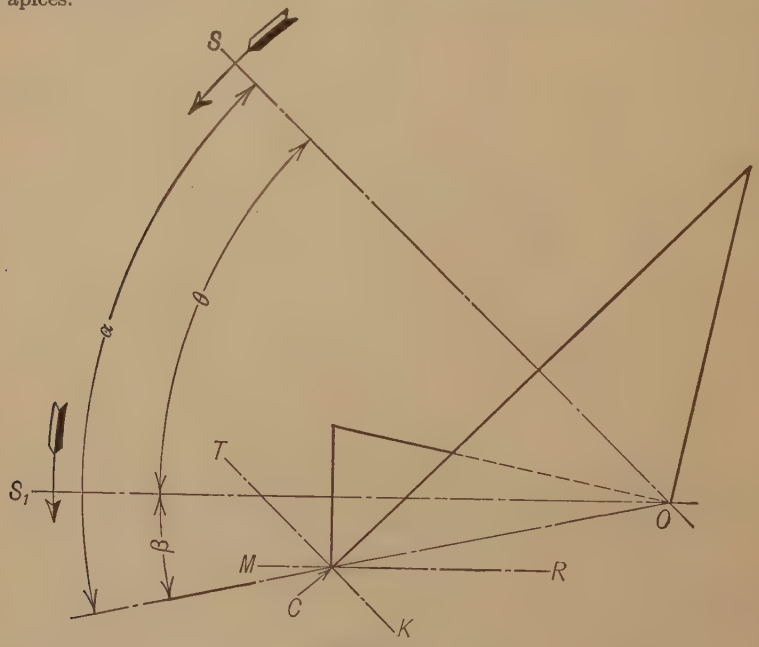

FIG. 92

Graphical Solution. (Fig. 92.) Draw the center lines of the shafts, SO and S_1O intersecting at 45° and put on the direction arrows as shown. Draw line MR parallel to S_1O and 15 units distant from it on the side toward which the direction

arrow points. In a similar way draw TK parallel to SO and 60 units distant from it. The point C where MR and TK intersect will be the point through which the element of contact CO is drawn. Having the element of contact the cones may be drawn as indicated in previous examples and are found to be in internal contact.

Calculations of Angles of Apices.

Using Equation (43)

$$\text{Tan } \beta = \frac{\text{Sin } \theta}{\frac{N_1}{N} - \cos \theta}.$$

Where $\theta = 45°$, $N_1 = 60$, $N = 15$,

$$\text{Tan } \beta = \frac{0.7071}{\frac{60}{15} - 0.7071} = 0.2147.$$

$\beta = 12° 7'$ nearly. $2\beta = 24° 14'$ = angle at apex of cone on S_1.

$\alpha = 45 + 12° 7' = 57° 7'$ nearly. $2\alpha = 114° 14'$ = angle at apex of cone on S.

92. Rolling Cylinder and Sphere.— Fig. 93 shows an example of a rolling cylinder and sphere as used in the Coradi planimeter. The segment of the sphere A turns on an axis ac passing through a, the center

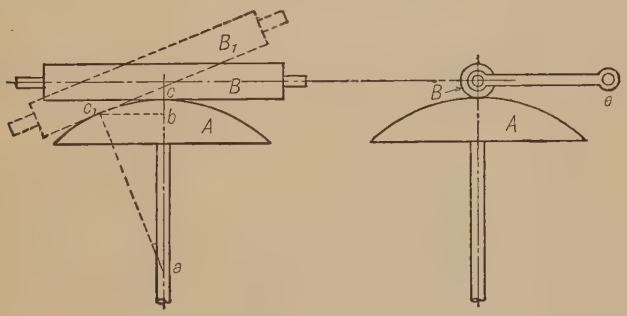

Fig. 93

of the sphere. The cylinder B, whose axis is located in a plane also passing through the center of the sphere, is supported by a frame pivoted at e and is held to the cylinder by a spring, not shown. The frame pivots e are movable about an axis at right angles to ac and passing through a, the center of the sphere. When the roller is in the position B with its axis at right angles to ac, the turning of the sphere produces no motion of B; when, however, the roller is swung so that its axis makes an angle bac_1 with its former position, as shown at B_1 by dotted lines, the point of contact is transferred to c_1 in the perpendicular from a to the roller axis. If now we assume the radius of the roller = R, the relative motion of roller and sphere, in contact at c_1, is the same as that

of two circles of radii R and bc_1 respectively. Transferring the point of contact to the opposite side of ab will result in changing the directional relation of the motion. The action of this device is purely rolling and but very little force can be transmitted. It is used only in very delicate mechanisms.

93. Disk and Roller. — If in Fig. 93 the radius of the sphere ac is assumed to become infinite and the roller B to be replaced by a sphere of the same diameter turning on its axis, the result will be a *disk and roller* as shown in Fig. 94, where AA represents the disk and B the roller, made up of the central portion of the sphere.

If we suppose the rotation of the disk to be uniform, the velocity ratio between B and A will constantly decrease as the roller B is shifted nearer the axis of A, and conversely. If the roller is carried to the other side of the axis, it will rotate in the opposite direction to the first.

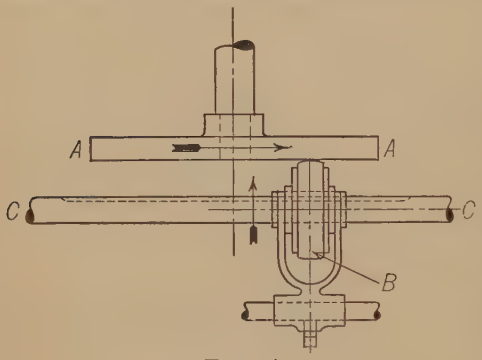

FIG. 94

This combination is sometimes used in feed mechanisms for machine tools, where it enables the feed to be adjusted and also reversed by simply adjusting the roller on the shaft CC. If possible the roller should drive.

94. Friction Gearing. Rolling cylinders and cones are frequently used to transmit force, and constitute what is known as *friction gearing*. In such cases the axes are arranged so that they can be pressed together with considerable force, and, in order to prevent slipping, the surfaces of contact are made of slightly yielding materials, such as wood, leather, rubber or paper, which, by their yielding, transform the line of contact into a surface of contact and also compensate for any slight irregularities in the rolling surfaces. Frequently only one surface is made yielding, the other being usually made of iron. As slipping is likely to take place in these combinations, the velocity ratio cannot be depended upon as absolute.

When rolling cylinders or cones are used to change sliding to rolling friction, that is, to reduce friction, their surfaces should be made as hard and smooth as possible. This is the case in roller bearings and in the various forms of ball bearings where spheres are arranged to roll in suitably constructed races, all bearing surfaces being made of hardened steel and ground.

Friction gearing is utilized in several forms of speed-controlling devices, among which the following are good examples:

Fig. 95 shows the mechanism of the Evans friction cones, consisting of two equal cones A and B turning on parallel axes with an endless movable leather belt C in the form of a ring running between them, the axis of B being urged toward A by means of springs or otherwise. By adjusting the belt along the cones, their angular speed ratio may be varied at will. It should be observed that there must be some slipping since the angular speed ratio varies from edge to edge of the belt, the resulting ratio approaching that of the mean line of the belt. A leather-faced roller might be substituted for the belt and a similar series of speeds obtained, the cones then turning in the same instead of in opposite directions.

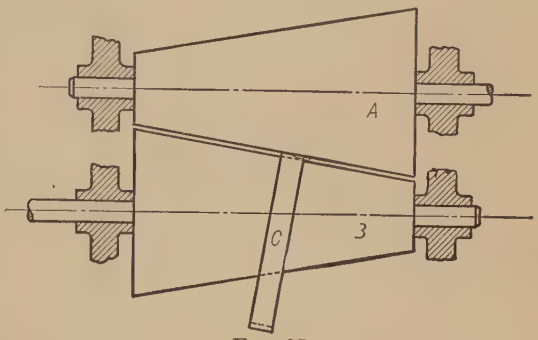

Fig. 95

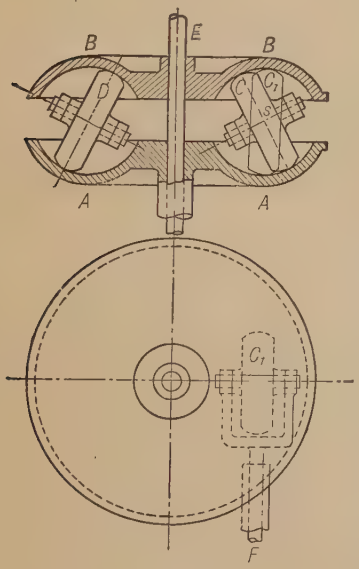

Fig. 96

Fig. 96 shows, in principle, another form, made by the Power and Speed Controller Co. Here two equal rollers, C and D, faced with a yielding material, are arranged to run between two equal hollow disks A and B. The rollers with their supporting yokes (only one of which is shown in the elevation) are arranged as indicated in the figure and are made by a geared connection, not shown, to turn opposite each other on the vertical yoke axes, s. The contour of the hollow in the disks must thus be an arc of a circle of radius equal that of the roller drawn from s as a center. If now the disk B is made fast to the shaft, and A, running loose, is urged against B by a spring or otherwise, a uniform motion of A may be made to give varying speeds to B by turning the rollers as shown. To increase the power two sets of disks are often used.

Fig. 97 shows the Sellers *feed disks* used to give a varying angular speed ratio between two parallel shafts, one of them controlling the feed on a machine.

The two outer wheels are thickened on their peripheries and run between two convex disks *BB* which are constantly urged together by hidden coil springs bearing against the spherical washers clearly shown. The disks *BB* are supported by the pivoted forked arm *D*. If now the disk *A* be given a uniform angular speed, the disk *C* may be made to have a greater or less angular speed as the axis of the disks *BB* is made to approach or recede from *A*.

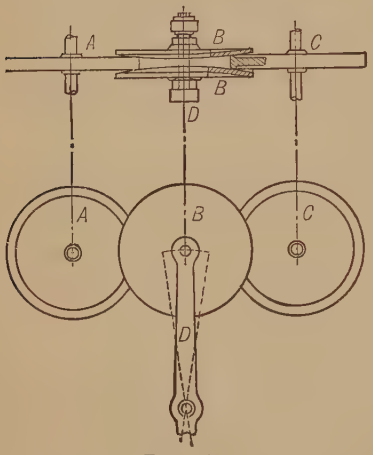

Fig. 97

In Fig. 98 a modified form of the Sellers disks is shown. The shaft *A* is driven by the pulley *P* and is carried by a forked arm supplied with two bearings *CC* and swinging about a point near the center of the pulley driving *P* by means of a belt. The externally rubbing disks *B* are free to slide axially on the shaft *A*, but turn with it and are constantly urged apart by springs clearly shown. The internally rubbing convex disks are made fast to the driven shaft by set screws. To vary the speed of *D*, that of *A* being constant, it is only necessary to vary the distance between the shafts. In the position shown *D* has its highest speed, the disks rubbing at *a*. When the shaft *A* is urged in the direction of the arrows the rubbing radius on *B* is diminished and that on *E* increased, the disks *BB* approaching each other. The disks *BB* may be made solid and one of the disks *E* be urged toward the other by a spring on its hub, which would simplify the construction.

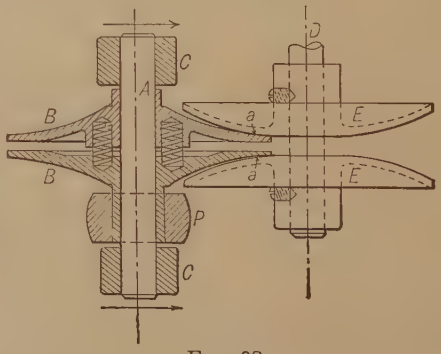

Fig. 98

95. Grooved Friction Gearing. — Another form of friction gearing is shown in Fig. 99. Here increased friction is obtained between the rolling bodies by supplying their surfaces of contact with a series of interlocking angular grooves; the

sharper the angle of the grooves, the greater the friction for a given pressure perpendicular to the axes; both wheels are usually made of cast iron. Here the action is no longer that of rolling bodies; but considerable sliding takes place, which varies with the shape and depth of the groove. This form of gearing is very generally used in hoisting machinery for mines and also for driving rotary pumps; in both cases a slight slipping would be an advantage, as shocks are quite frequent in starting suddenly and their effect is less disastrous when slipping can occur.

The speed ratio is not absolute but is substantially the same as that of two cylinders in rolling contact on a line drawn midway between the

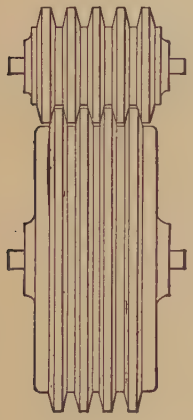

FIG. 99

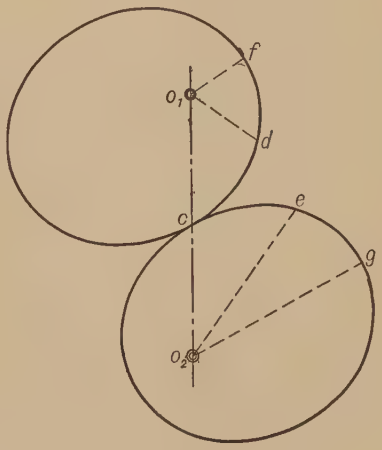

FIG. 100

tops of the projections on each wheel, they being supposed to be in working contact.

96. Rolling of Non-cylindrical Surfaces.— If the angular speed ratio of two rolling bodies is not a constant, the outlines will not be circular. Whatever forms of curves the outlines take, the conditions of pure rolling contact should be fulfilled, namely, the point of contact must be on the line of centers, and the rolling arcs must be of equal length. For example, in the rolling bodies represented by Fig. 100 with o_1 and o_2 the axes of rotation, we must find the sum of the radiants in contact, $o_1c + o_2c$, equal to the sum of any other pair, as $o_1d + o_2e$, $o_1f + o_2g$; and also the lengths of the rolling arcs must be equal, $cd = ce$, $df = eg$. This will cause the successive points on the curves to meet on the line of centers, and the rolling arcs, being of equal length, will roll without slipping.

There are four simple cases of curves which may be arranged to fulfill these conditions:

A pair of logarithmic spirals of the same obliquity.
A pair of equal ellipses.
A pair of equal hyperbolas.
A pair of equal parabolas.

We shall also find that any of the above curves may be transformed in one way or another and still fulfill the conditions of perfect rolling contact while allowing a wide range of variation in the angular speed ratio.

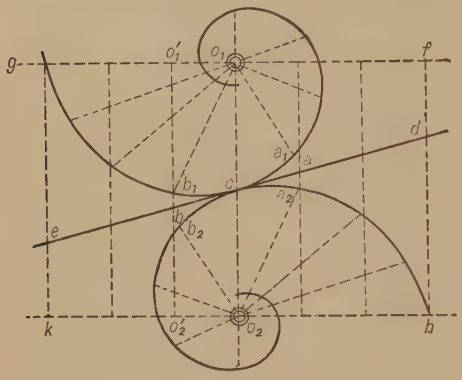

Fig. 101

97. The Rolling of two Logarithmic Spirals of Equal Obliquity. — Fig. 101 shows the development of a pair of such spirals, where, if they roll on the common tangent *de*, the axes o_1 and o_2 will move along the lines *fg* and *hk* respectively. The arcs a_1c, cb_1, etc., being equal to a_2c, cb_2, etc., and also equal to the distances *ac*, *cb*, etc., on the common tangent, it will be clear that if the axes o_1 and o_2 are fixed, the spirals may turn, fulfilling the conditions of perfect rolling contact; for the arc cb_1 = arc cb_2, and also the radiant o_1b_1 + radiant o_2b_2 = $o_1'b$ + $o_2'b$ = o_1c + o_2c; and similarly for successive arcs and radiants.

98. To construct two spirals, as in Fig. 101, with a given obliquity. — The equation for such a logarithmic spiral is

$$r = ae^{b\theta},$$

where a is the value of r when θ is zero; and $b = \dfrac{1}{\tan \phi}$, ϕ being the constant angle between the tangent to the curve and the radiant to the point of tangency; and where e is the base of the Naperian logarithms.

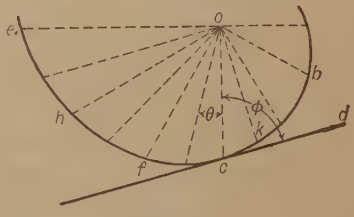

Fig. 102

In Fig. 102 let $oc = a$, and $ocd = \phi$. Taking successive values of θ, starting from *oc*, we may calculate the values of r and thus plot the curve. If, however, it is desired to pass a spiral through two points on radiants a given angle apart, it is to be noticed from the equation of the

curve that if the successive values of θ are taken with a uniform increase, the lengths of the corresponding radiants will be in geometrical progression. To draw a spiral through the points b and e, Fig. 102, bisect the angle boe, and make of a mean proportional between ob and oe; f will be a point on the spiral. Then by the same method bisect foe, and find oh; also bisect bof and find ok, and so on; a smooth curve through the points thus found will be the desired spiral.

99. Continuous Motion. — Since these curves are not closed, one pair cannot be used for continuous motion; but a pair of such curves may be well adapted to sectional wheels requiring a varying angular speed. For example, in Fig. 103, given the axes o_1 and o_2, the angle co_1e through which A is to turn, and the limits of the angular speed ratio. Make $\frac{o_1c}{o_2c}$ equal to the minimum angular speed ratio and $\frac{o_1d}{o_2d}$ equal to the maximum angular speed ratio. Then o_1c must equal o_1d. Now construct a spiral through the points c and e. The spiral for B is that part of the spiral

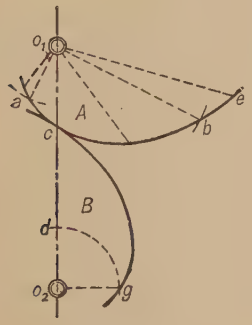

FIG. 103

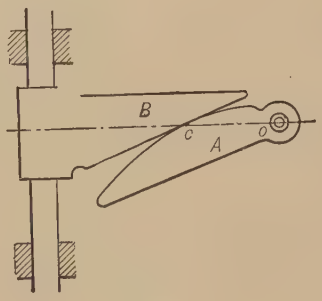

FIG. 104

A constructed about o_1 which would be included between radiants o_1b and o_1a, equal respectively to o_2c and o_2g $(= o_2d)$, which may be found by continuing the spiral about o_1 beyond c or e if necessary. Since these curves (Fig. 103) are parts of the same spiral, and since by construction $o_1c + o_2c = o_1e + o_2g$, A could drive B, the points e and g ultimately rolling together at d on the line of centers. The conditions of rolling contact are evidently fulfilled, as will be seen by referring to § 97.

100. Logarithmic Spiral Driving Slide. — Fig. 104 shows a logarithmic spiral sector A driving a slide B. Here the driven surface of the slide coincides with the tangent to the spiral, the line of centers being from o through c to infinity and perpendicular to the direction of motion of the slide. In this combination the linear speed of the slide will equal

the angular speed of A multiplied by the length of the radiant in contact oc.

101. Wheels using Logarithmic Spirals arranged to allow Complete Rotations. — By combining two sectors from the same or from different spirals, unilobed wheels may be found which may be paired in such a way as to fulfill the laws of perfect rolling contact. Taking two equal sectors from the same spiral, we should have a symmetrical unilobed wheel, as A (Fig. 105), and this will run perfectly with a wheel B exactly like A, as shown. If A is the driver, the minimum angular speed of B will occur when the points d and e are in contact, and we shall have

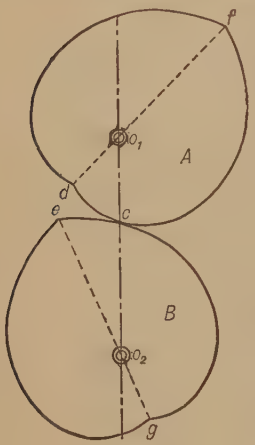

Fig. 105

$$\frac{\text{a.v. } B}{\text{a.v. } A} = \frac{o_1 d}{o_2 e}.$$

The maximum angular speed of B will occur when the points f and g are in contact. Such wheels are readily formed, if the maximum and minimum angular speed ratios are known, by the method in § 97, only it is to be noticed that the minimum ratio must be the reciprocal of the maximum ratio, and that the angle which each sector subtends must be 180° Unilobed wheels need not be formed from equal sectors, in which case the sectors used will not have the same obliquity nor will the subtended angles be equal, but the wheels must be so paired that sectors of the same obliquity shall be in contact. Fig. 106 shows a pair of such wheels in which maximum and minimum angular speed ratios occur at unequal intervals; it will, however, be noticed that the minimum angular speed ratio must here also be the reciprocal of the maximum ratio.

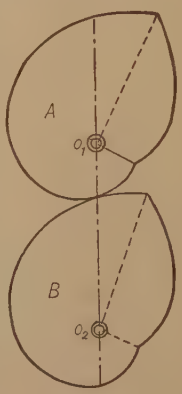

Fig. 106

By a similar method wheels may be formed which shall give more than one position of maximum and of minimum angular speed ratio; that is, there may be either symmetrical or unsymmetrical bilobed wheels, trilobed wheels, etc. Fig. 107 shows a pair of symmetrical bilobed wheels. Here all the sectors are from the same spiral, all the same length, each subtending an angle of 90°. It will be seen that the conditions of rolling contact are perfectly fulfilled and that if A turns uniformly B will have two positions of maximum and two of minimum speed. Similarly a

pair of symmetrical trilobed wheels could be formed where each of the sectors subtends an angle of 60°.

Following the method used in obtaining the unsymmetrical unilobed wheels of Fig. 106, a pair of unsymmetrical bilobed wheels could be arranged, provided only that sectors of the same obliquity come into contact and that such sectors subtend equal angles. Fig. 108 shows a pair of trilobed wheels of this form.

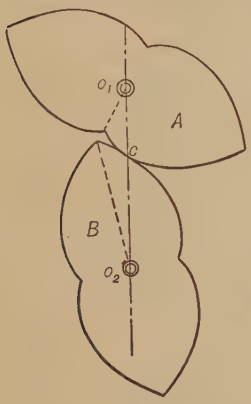

FIG. 107

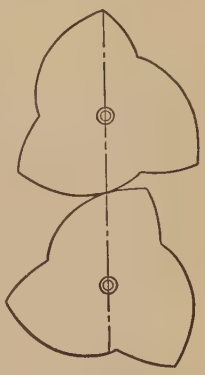

FIG. 108

Such wheels as those just described cannot be interchangeable, but since any two spiral arcs having the same obliquity will roll correctly, a unilobe may be made to roll correctly with a bilobe where the sectors of the unilobe are from a given spiral and each subtending 180°, and where each of the sectors of the bilobe is of the same length as one of those of the unilobe, and from a spiral of the same obliquity, but where each subtends an angle of 90°. In a similar manner a trilobed wheel may be found which could be driven by the same unilobed wheel as above, hence

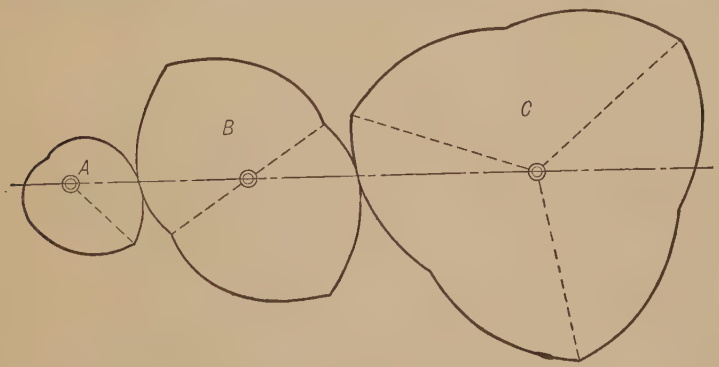

FIG. 109

also by the bilobed wheel found from that unilobe. These wheels would therefore be interchangeable. Fig. 109 shows a set of such wheels which would be symmetrical wheels. A set of unsymmetrical wheels could be found in a similar manner.

102. The Rolling of Equal Ellipses. — If two equal ellipses, each turning about one of its foci, are placed in contact in such a way that the

distance between the axes o_1o_2, Fig. 110, is equal to the major axis of the ellipses, we shall find that they will be in contact on the line of centers and that the rolling arcs are of equal length. If the point c is on the line of centers o_1o_2, we should have $o_1c + co_2 = o_1o_2 = o_1c + cd$, and therefore $cd = co_2$. Since the tangent to an ellipse at any point, as c, makes equal angles with the radii from the two foci, $o_1cm = dcn$ and $ecm = o_2cn$; but since $cd = co_2$, the point c is similarly situated in the two ellipses, and therefore the angle o_1cm would equal the angle o_2cn, which would give a common tangent to the two curves at c. Hence if o_1o_2 is equal to the major axis, the ellipses could be in rolling contact on the line o_1o_2. Since the distances cd and co_2, from the foci d and o_2 respectively, are equal, it also follows that the arc cf is equal to the arc cg which completes the requirements for perfect rolling contact. It will also be noticed that the line dce will be straight and that a link could connect d and e, as will be seen when discussing linkwork.

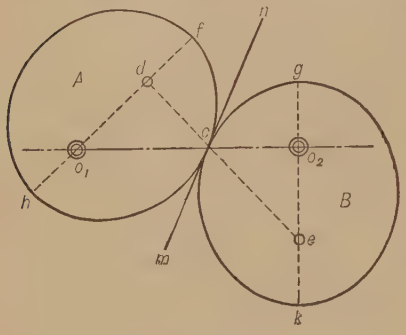

FIG. 110

If A (Fig. 110) is the driver, the angular speed ratio will vary from a minimum when h and k are in contact, and then equal to $\frac{o_1h}{o_2k}$, to a maximum when f and g are in contact, when it will equal $\frac{o_1f}{o_2g}$. The angular speed ratio will be unity when the major axes are parallel, the point of contact being then midway between o_1 and o_2.

Such rolling ellipses supplied with teeth, thus forming elliptic gears, are sometimes used to secure a quick-return motion in a slotting machine.

103. Multilobed Wheels Formed from Rolling Ellipses. — Non-interchangeable wheels may be formed from a pair of ellipses by contracting the angles the same amount in each ellipse. Thus, if the angles were contracted to one-half their size, a pair of bilobed wheels could be formed; and if to one-third their size, a pair of trilobed wheels. Such wheels would give perfect rolling contact, but could only be used in pairs as stated.

By a different method of contraction a pair of wheels may be formed, one of which may be, for example, a bilobe and the other a trilobe. By this method only parts of the original ellipses are used; parts which

would roll correctly, but which subtend unequal angles in some desired ratio. If the arcs subtend angles in proportion as 2 is to 3, the angles may be contracted or expanded to be 60° and 90°, which are in the same ratio, when we shall have arcs suitable for a trilobe and a bilobe respectively, which will roll correctly. For example, assume the foci o_1 and d (Fig. 111); lay off angles fo_1d and fde as 2 to 3. Then the point f will lie on an ellipse from which a bilobe and a trilobe may be formed by contracting the angle fo_1d to 60° and the angle $go_2d = fde$ to 90°, as shown in the figure.

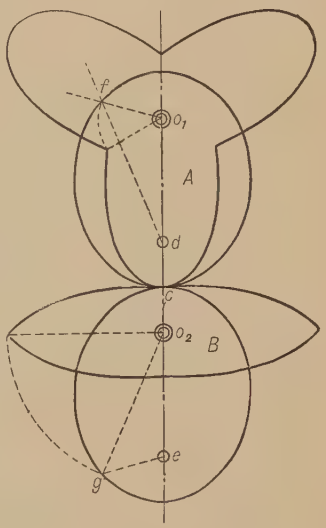

Fig. 111

104. The Rolling of Equal Parabolas. — Two parabolas may be considered as two ellipses with one focus of each removed to infinity. In the ellipses of Fig. 110 suppose the foci o_1 and e to be so removed; we shall have the parabolas of Fig. 112 in contact at the point c and in perfect rolling contact, one turning about its focus o_2 as an axis, and the other having a motion of translation perpendicular to o_1d.

To prove the rolling action perfect, assume the parabolas with their vertexes in contact at m. Let f be the point on the turning parabola which will move to c, so that $o_2f = o_2c$. Draw fg parallel to o_2c, and since the parabolas are equal we shall have $lg = o_2f$, therefore $lg = o_2c$; but since o_2k is the directrix of the parabola whose focus is now at l, $lg = gk$; therefore $gk = o_2c$, and as this parabola slides perpendicular to o_1d, the point g would also move to c. The rolling arcs mf and mg are equal. Thus the parabola turning about o_2 would cause the other parabola to have translation perpendicular to o_1d, the two moving in perfect rolling contact.

105. The Rolling of Equal Hyperbolas. — If two equal hyperbolas are placed, as in Fig. 113, so that the distances between their foci o_1 and o_2, and d and e, are each equal to $fg = hk$, the distance between the vertexes of the hyperbolas, we shall find them in contact at some point c. If the foci o_1 and o_2 are then taken as axes of rotation, the hyperbolas will turn in perfect rolling contact. To prove this take the point l on the hyperbola whose foci are at o_1 and d so that $o_1l = dc$ and $o_1c = dl$. Then since a tangent at any point on a hyperbola makes equal angles with the radii from the two foci, the tangent at l will bisect the angle o_1ld

and the tangent at c will bisect the equal angle o_1cd. If now the branch o_1hl is placed tangent to the branch dkc with the points l and c in contact, the radius lo_1 must fall on o_1c and dl on dc. Since the difference

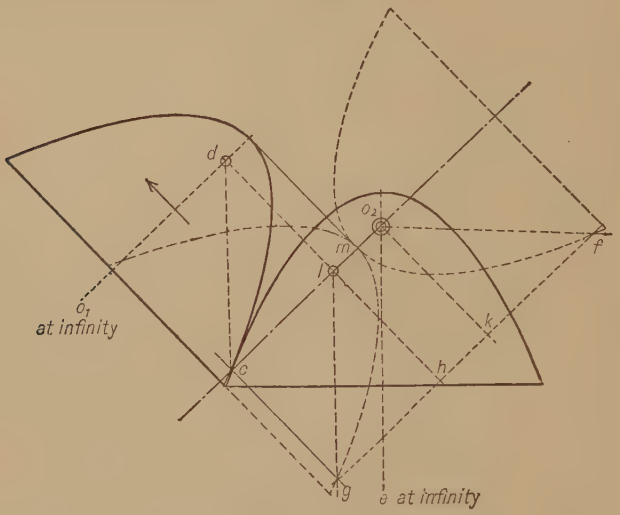

FIG. 112

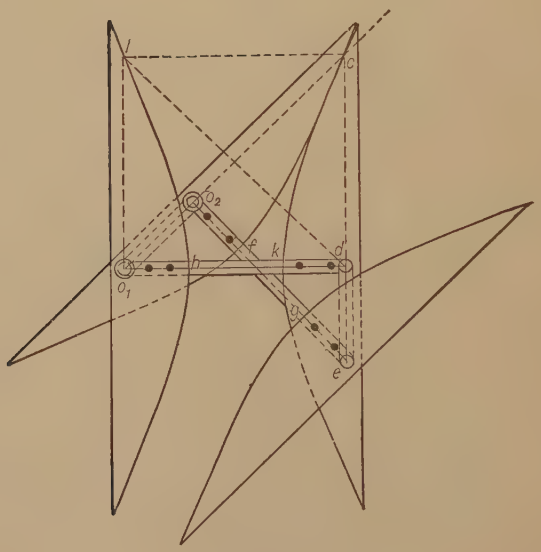

FIG. 113

between the radii from the two foci to any point on a hyperbola is a constant and equal to the distance between the vertexes, $o_1c - dc = hk$; but o_1l was taken equal to dc, hence $o_1c - o_1l = hk$. Then, since o_1o_2 was

originally assumed equal to hk, we shall have $o_1c - o_1l = o_1o_2$, and therefore the line o_1o_2c will be a straight line, and the point of contact c will lie on the line of centers. The arc lh which is equal to ck will also be equal to cf. Therefore the hyperbolas will be in perfect rolling contact. The same reasoning will apply for any position of the point of contact. It will be seen in a later chapter that since $o_1o_2 = de$ = a constant, and $o_1d = o_2e$ = a constant, the linkage o_1o_2ed with the axes o_1 and o_2 fixed would cause the same angular speed ratio about o_1 and o_2 as the rolling hyperbolas would give.

If the hyperbola turning about the axis o_2 is the driver, the angular speed ratio will be a minimum when the vertexes f and k are in contact and will be $\frac{o_2f}{o_1k}$; this ratio will increase as the point of contact approaches infinity, when the ratio would be unity, and would correspond to the position of the linkage when o_1o_2 and de are parallel. Further rotation would bring the opposite branches of the hyperbolas into contact, the maximum angular speed ratio occurring as the points g and h come together, when its value becomes $\frac{o_2g}{o_1h}$. The construction shown in the figure will allow only a limited motion.

CHAPTER V

GEARS AND GEAR TEETH

106. Gear Drives. It was shown in Chapter IV that one shaft could cause another to turn by means of two bodies in pure rolling contact. If the speed ratio must be exact or if much power is to be transmitted, a drive depending solely upon friction between the surfaces of the rolling bodies is not sufficiently positive. For this reason toothed wheels, called gears, are used in place of the rolling bodies. As the gears turn the teeth of one gear slide on the teeth of the other but are so designed that the angular speeds of the gears are the same as those of the rolling bodies which they replace.

107. Gearing Classified. In § 83 attention was called to the fact that rolling bodies may be used to connect axes which are parallel, intersecting, or neither parallel nor intersecting. The same cases arise in the use of gears, and special names are given to the gears according to the case for which they are designed.

Gears may be classified on the above basis as follows:

Spur Gears	External Gears — Fig. 114. Internal Gears — Fig. 115 (Here the large gear is called an annular and the small one a pinion) Twisted Spur Gear — Fig. 116. Herring Bone Spur Gear — Fig. 117. Rack and Pinion — Fig. 118. (The rack is a gear of infinite radius) Pin Gearing — Fig. 119.	Connecting Parallel Axes
Bevel Gears	Plain Bevel (including Mitre Gears, which are equal bevel gears on shafts at 90°) — Fig. 120. Crown Gears — Fig. 121. Twisted Bevel Gears — Fig. 122.	Connecting Intersecting Axes
Hyperboloidal or Skew Gears — Fig. 123.		Connecting Axes in different planes.
Screw Gearing	Worm and Wheel — Fig. 124. Helical Gears — Fig. 125.	Connecting Axes in different planes.

The name **pinion** is often applied to the smaller of a pair of gears.

The various kinds of gears enumerated above will be discussed in more detail after the principles which apply to gearing in general have been considered.

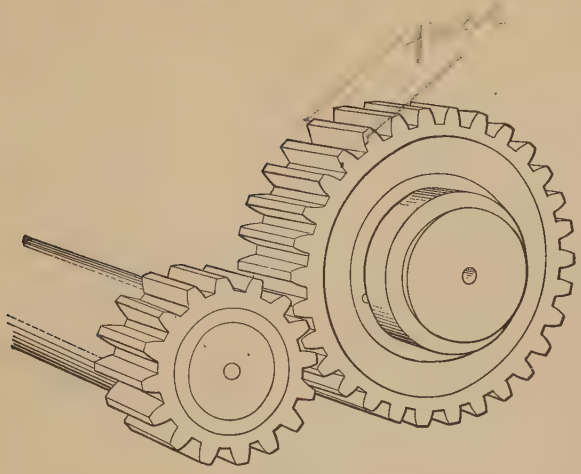

FIG. 114

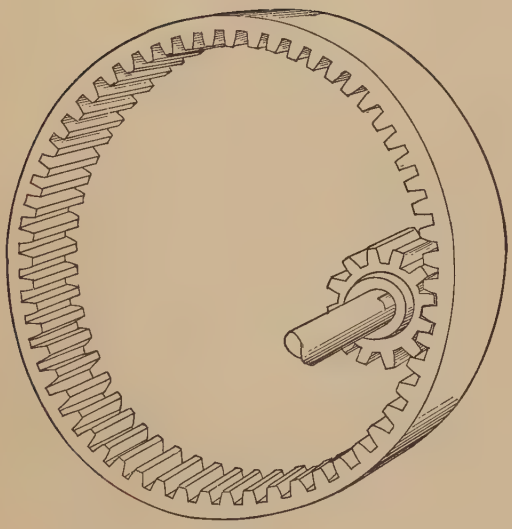

FIG. 115

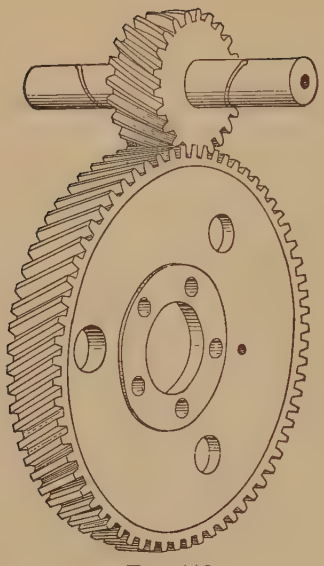

FIG. 116

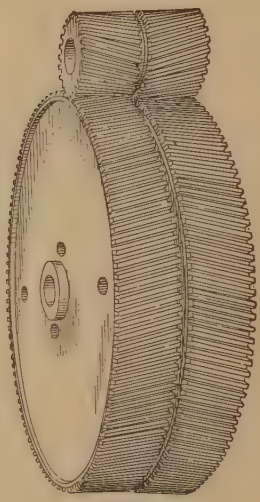

FIG. 117

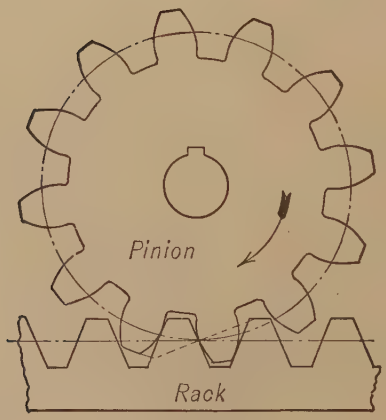

FIG. 118

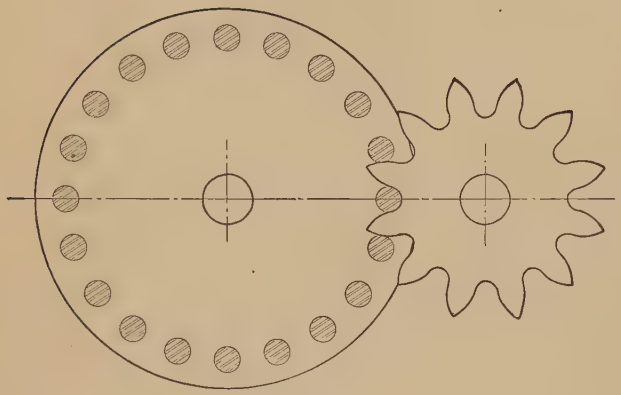

FIG. 119

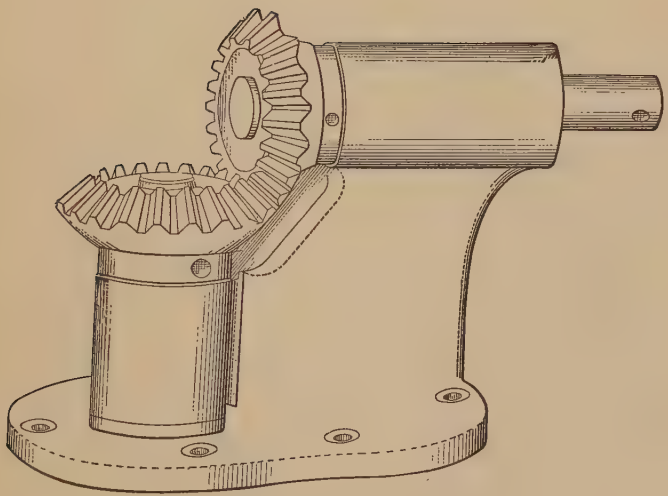

FIG. 120

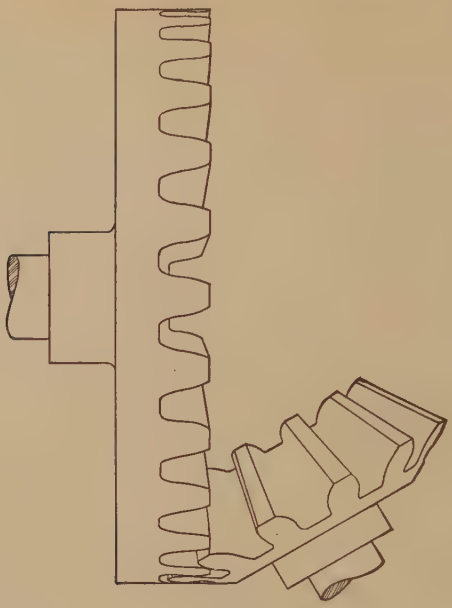

FIG. 121

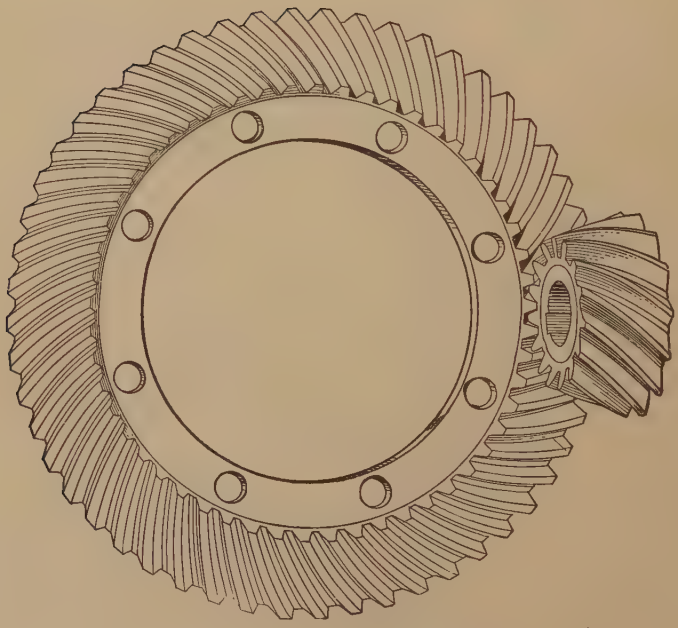

FIG. 122

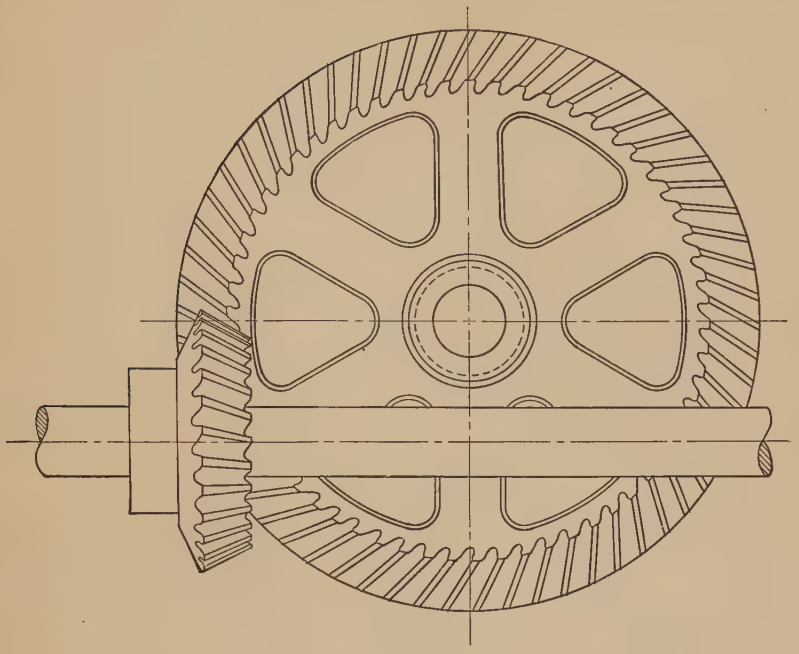

FIG. 123

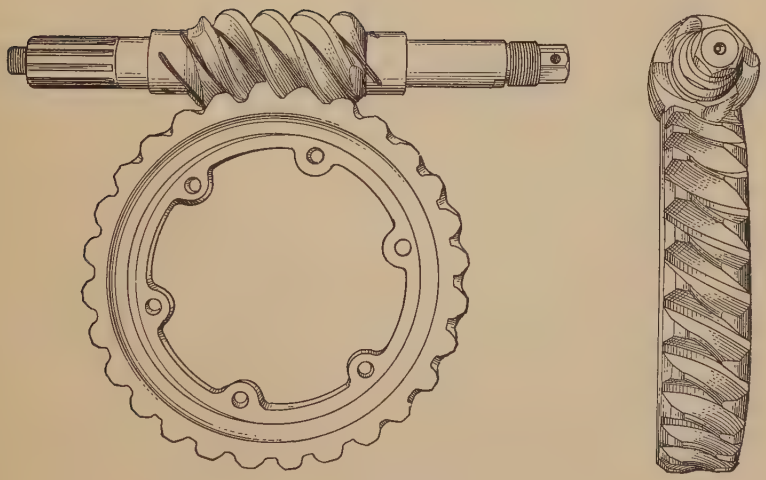

FIG. 124

108. Speed Ratio of a Pair of Gears. It has been shown in the preceding chapter that if two cylinders as A and B, Fig. 126, are keyed to the shafts S and S_1 respectively, the angular speed of S is to the angular speed of S_1 as D_1 is to D, provided there is sufficient friction between the circumferences of the discs to prevent one slipping on the other. If the speed ratio must be exact, or if much power is to be transmitted, a drive like this, depending solely upon friction, is not positive enough. To make sure that there shall be no slipping, wheels having teeth around their circumferences are substituted for the plain discs. The outlines of these teeth must be such that the speed ratio is constant. Such a pair of wheels is shown in Fig. 127. Here the larger gear has 16 teeth and the smaller gear 12 teeth. Assume that the shaft S is being turned from some external source of power; the gear A, since it is keyed to S, will turn with it. Then the teeth on A will push the teeth on B, a tooth on A coming in contact with a tooth on B and pushing that tooth along until the gears have turned so far around that those two teeth swing out of reach of each other. In order for B to make a complete revolution each one of its 12 teeth must be pushed along thus past the center line. Therefore, while B turns once 12 of the teeth on A must pass the center line Since A has 16 teeth in all, A will therefore make $\frac{12}{16}$ of a turn while B makes one turn. In other words, *the turns of A in a given time are to the turns of B in the same time as the number of teeth on B are to the number of teeth on A.*

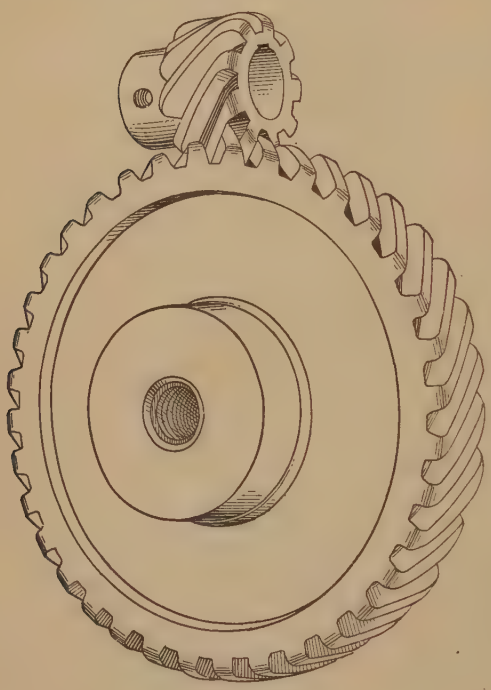

FIG. 125

It is evident that the distance from the center of one tooth to the center of the next tooth on both gears must be alike in order that the teeth on one may *mesh* into the spaces on the other.

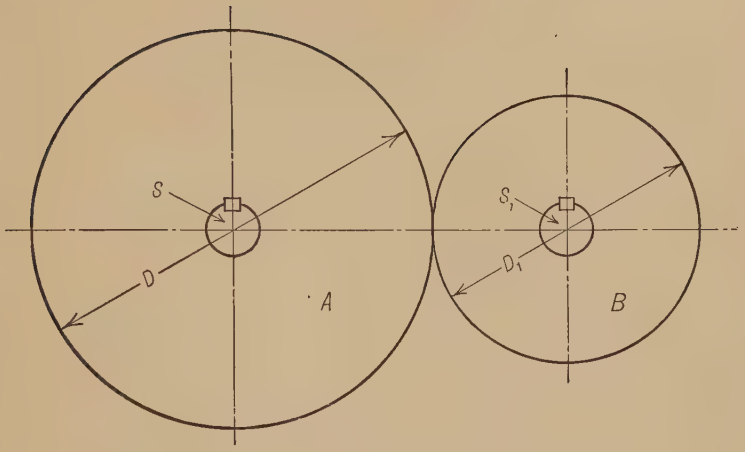

FIG. 126

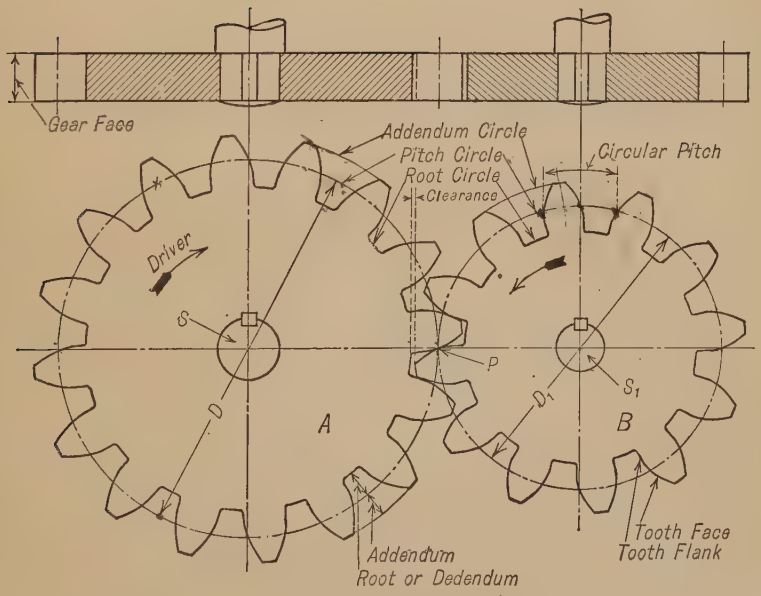

FIG. 127

109. Pitch Circles and Pitch Point. Let a point P (Fig. 127) be found on the center line SS_1 such that $\frac{PS}{PS_1} = \frac{\text{Teeth on } A}{\text{Teeth on } B}$ and through this point draw circles about S and S_1 as centers. Call their diameters D and D_1. Then $D = 2\,PS$ and $D_1 = 2\,PS_1$. Since, as shown above,

$$\frac{\text{Revolutions of } B}{\text{Revolutions of } A} = \frac{\text{Teeth on } A}{\text{Teeth on } B},$$

therefore,

$$\frac{\text{Revolutions of } B}{\text{Revolutions of } A} = \frac{D}{D_1}.$$

That is, the two gears when turning will have the same speed ratio as would two rolling cylinders of diameters D and D_1. The point P which divides the line of centers of a pair of gears into two parts proportional to the number of teeth in the gears is called the **pitch point.** The circle D, drawn through P with center at S, is the **pitch circle** of the gear A and the circle D_1 is the **pitch circle** of the gear B.

110. Addendum and Root Circles. The circle passing through the outer ends of the teeth of a gear is called the **addendum circle** and the circle passing through the bottom of the spaces is called the **root circle.**

111. Addendum Distance and Root Distance. Length of Tooth. The radius of the addendum circle minus the radius of the pitch circle is the **addendum distance,** or, more commonly, the **addendum.** The radius of the pitch circle minus the radius of the root circle is the **root distance** or **root** or **dedendum.** The root plus the addendum is the **length of tooth.**

112. Face and Flank of Tooth. Acting Flank. That portion of the tooth curve which is outside the pitch circle is called the **face of the tooth** or **tooth face.** This must not be confused with the term "face of gear" (§ 113). The part of the tooth curve inside the pitch circle is called the **flank of the tooth.**

That part of the flank which comes in contact with the face of the tooth of the other gear is called the **acting flank.**

113. Face of Gear. The length of the gear tooth measured along an element of the pitch surface is called the length of the face of the gear or **width of face** of the gear. (See top view, Fig. 127.)

114. Clearance. The distance measured on the line of centers, between the addendum circle of one gear and the root circle of the other, when they are in mesh, is the **clearance.**

This is evidently equal to the root of one gear minus the addendum of the mating gear.

115. Backlash. When the width of a tooth, measured on the pitch circle, is less than the width of the space of the gear with which it is in mesh, the difference between the width of space and width of tooth is called the **backlash.** This is shown in Fig. 128 where S minus T is the backlash, S and T being understood to be measured on the arcs of the pitch circles. Accurately made gears rarely have any appreciable amount of backlash, but cast gears or roughly made gears require backlash.

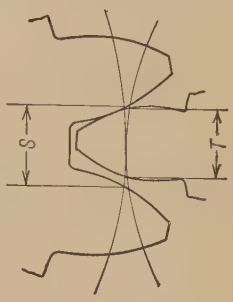

FIG. 128

116. Circular Pitch. The distance from the center of one tooth to the center of the next tooth, measured on the pitch circle, is called the **circular pitch.** This is, of course, equal to the distance from any point on a tooth to the corresponding point on the next tooth measured along the pitch circle. (See Fig. 127.) *The circular pitch is equal to the width of tooth plus the width of the space between teeth, measured on the pitch circle.* The whole circumference of the pitch circle is equal to the circular pitch multiplied by the number of teeth, or the circular pitch is equal to the circumference of the pitch circle divided by the number of teeth. In Fig. 127 let T represent the number of teeth in the gear A and let C represent the circular pitch. Then,

$$C = \frac{\pi D}{T}. \tag{44}$$

Two gears which mesh together must have the same circular pitch.

117. Diametral Pitch and Pitch Number. Module. The term **diametral pitch** is used by different authorities to mean two different quantities. Most gear makers' catalogues and many books on gearing define diametral pitch as the number of teeth per inch of diameter of pitch circle. For example, if a gear has 24 teeth and the diameter of its pitch circle is 8 in., these authorities would say that the diametral pitch of the gear is 24 divided by 8 or is 3. Such a gear is described as a 3-pitch gear. This is also called the **pitch number.**

Other authorities define diametral pitch as the length of pitch diameter which the gear has per tooth, or the ratio of the diameter to the number of teeth. That is, referring again to the 24 tooth gear having a pitch diameter of 8 in., according to this latter definition the diametral pitch would be 8 in. divided by 24 or $\frac{1}{3}$ of an inch. Another name for this quantity is **module.**

Throughout this book the terms **diametral pitch** and **pitch number** will be used interchangeably, meaning the number of teeth per inch of pitch diameter, and the name **module** will be used for the amount of diameter per tooth.

If M represents the module and $P.N.$ the pitch number or diametral pitch, T the number of teeth and D the pitch diameter, the above may be expressed in the form of equations as follows:

$$M = \frac{\text{Pitch diameter}}{\text{Teeth}} = \frac{D}{T}, \tag{45}$$

$$P.N. = \frac{\text{Teeth}}{\text{Pitch diameter}} = \frac{T}{D}. \tag{46}$$

Therefore, $$M = \frac{1}{P.N.}.$$

118. Relation between Circular Pitch and Module.

From Eq. (45) $$M = \frac{D}{T},$$

and from Eq. (44) $$C = \frac{\pi D}{T}.$$

Dividing Eq. (44) by Eq. (45),

$$\frac{C}{M} = \frac{\pi D}{T} \div \frac{D}{T} = \pi,$$

or $$C = M \times \pi, \tag{47}$$

or $$C = \frac{\pi}{P.N.}. \tag{48}$$

Or, in words, the circular pitch is equal to the module multiplied by π.

119. Angle and Arc of Action. The angle through which the driving gear turns while a given tooth on the driving gear is pushing the corresponding tooth on the driven gear is called the **angle of action of the driver.** Similarly, the angle through which the driven gear turns while a given one of its teeth is being pushed along is called the **angle of action of the driven gear.** The **angle of approach,** in each case, is the angle through which the gear turns from the time a pair of teeth come into contact until they are in contact at the pitch point. It will be shown later that the pitch point is one of the points of contact of a pair of teeth during the action. The **angle of recess** is the angle turned through from the time of pitch point contact until contact ceases.

The angle of action is therefore equal to the angle of approach, plus the angle of recess.

In Fig. 129 a tooth M on the driving gear is shown (in full lines) just beginning to push a tooth N on the driven gear. The dotted lines show the position of the same pair of teeth when N is just swinging out of reach of M. While M has been pushing N, any radial line on the gear B, as, for example, the line drawn through the center of the tooth M, has swung through the angle K, and any line on gear A has swung through the angle V. K is, therefore, the angle of action of the gear B, and V is the angle of action of the gear A.

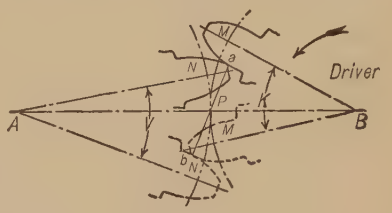

FIG. 129

It should be noted that the angles of approach and recess are *not shown* in Fig. 129.

The **arc of action** is the arc of the pitch circle which subtends its angle of action. The **arcs of approach** and **recess** bear the same relation to the angles of approach and recess as the arc of action bears to the angle of action. Since the arcs of action on both gears must be equal, the angles of action must be inversely as the radii.

Therefore the following equation holds true:

$$\frac{\textit{Angle of action of driver}}{\textit{Angle of action of driven gear}} = \frac{\textit{Number of teeth on driven gear}}{\textit{Number of teeth on driver}}. \quad (49)$$

The arc of action must never be less than the circular pitch, for, if it were, one pair of teeth would cease contact before the next pair came into contact.

120. The Path of Contact. Referring still to Fig. 129, the teeth as shown in full lines are touching each other at one point a. This point is really the projection on the plane of the paper of a line of contact equal in length to the width of the gear face (see § 113). In the position shown dotted the teeth touch each other at the point b. If the teeth were drawn in some intermediate position, they would touch at some other point. For every different position which the teeth occupy during the action of one pair of teeth they have a different point of contact. A line drawn through all the points at which the teeth touch each other (in this case the line aPb) is called the *path of contact*. This may be a straight line or a curved line, depending upon the nature of the curves which form the tooth outlines. In all properly constructed gears the pitch point P is one point on the path of contact.

121. Obliquity of Action or Pressure Angle. The angle between the line drawn through the pitch point perpendicular to the line of centers, and the line drawn from the pitch point to the point where a pair of

teeth are in contact is called the *angle of obliquity* of action or *pressure angle.* In some forms of gear teeth this angle remains constant while in other forms of teeth it varies.

The direction of the force which the driving tooth exerts on the driven tooth is along the line drawn from the pitch point to the point where a pair of teeth are in contact (see § 122). The smaller the angle of obliquity the greater will be the component of the force in the direction to cause the driven gear to turn and the less will be the tendency to force the shafts apart. In other words, a large angle of obliquity tends to produce a large pressure on the bearings.

122. Law Governing the Shape of the Teeth. The curves which form the outline of the teeth on a pair of gears may, in theory at least, have any form whatever, provided they conform to one law, namely: *The line drawn from the pitch point to the point where the teeth are in contact must be perpendicular to a line drawn through the point of contact tangent to the curves of the teeth.*

That is, the common normal to the tooth curves at all points of contact must pass through the pitch point.

This is illustrated in Fig. 130. The teeth in the full line position touch each other at *a*. That is, the curves are tangent to each other

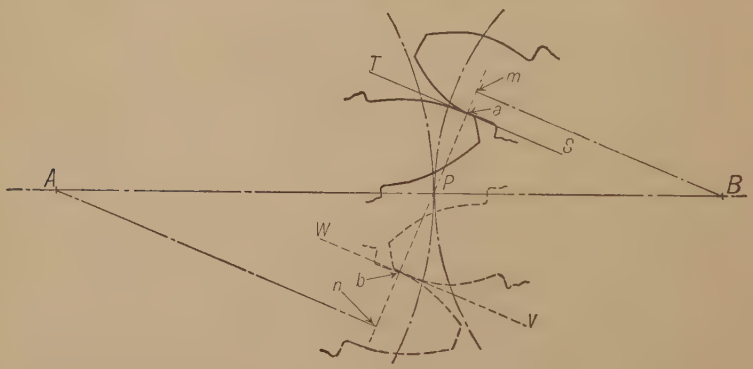

Fig. 130

at this point. The line ST is drawn tangent to the two curves at a. The curves must be made so that this tangent line is perpendicular to the line drawn from a to P. Similarly, in the dotted position the line VW which is tangent to the curves at their point of contact b must be perpendicular to the line bP. This must hold true for all positions in which a pair of teeth are in contact, in order that the speed ratio of the gears shall be constant.

This law may be proved as follows: Let An and Bm be lines drawn from the centers A and B perpendicular to the common normal through

the point of contact a. Let ω_A = angular speed of gear A (expressed in radians) and ω_B = the angular speed of B. Then linear speed of $n = \omega_A \times An$ and linear speed of $m = \omega_B \times Bm$. The direction of motion of m and n are both along nm at the instant under consideration and the motion is the same as if wheel A were pulling B by an inextensible cord attached at m and n. That is, the linear speed of m = linear speed of n. Therefore $\omega_A \times An = \omega_B \times Bm$ or $\frac{\omega_A}{\omega_B} = \frac{Bm}{An}$. But since the angular speeds of the radii to two points which have the same linear speed are inversely as the radii, $\frac{\omega_A}{\omega_B} = \frac{BP}{AP}$.

Therefore, $$\frac{Bm}{An} = \frac{BP}{AP}.$$

Hence nm must intersect the line of centers AB at P.

123. Conjugate Curves. Two curves are said to be **conjugate** when they are so formed that they may be used for the outline of two gear teeth which will work on each other and fulfill the law described in § 122.

124. To Draw a Tooth Outline which shall be Conjugate to a Given Tooth Outline. Given the face or flank of a tooth of one of a pair of wheels, to find the flank or face of a tooth of the other. The solution of this problem depends on the fundamental law, § 122. In Fig. 131 let the flank and face of a tooth on A be given. If A is considered as the driver, points on the flank, as a and b, will be points of contact in the approaching action, and by the law they can properly be points of contact only when the normals to the flank at these points pass through the pitch point; therefore drawing ac and bd normals to the flank from the points a and b respectively, and then turning A backward until the points c and d are at the pitch point, we find positions a_1 and b_1 which a and b respectively must occupy when they can be points of contact with the face of a tooth of the other wheel. The point a_1 must be a point on the desired face of a tooth on the wheel B when the pitch circles have been moved backward an arc equal to c_1c, that is, so that c is at the pitch point. To find this point when the teeth are in the original position, it is necessary to move the wheels forward, the wheel B carrying with it the point a_1 and the normal a_1c_1 until the point c_1 has moved through an arc c_1c_2 equal to c_1c; this will carry the point a_1 to a_2, and the normal a_1c_1 to a_2c_2. During this same forward motion the normal c_1c_1 moving with the wheel A will return to its original position ac.

In a similar manner the point b_1, which can be a point of contact of

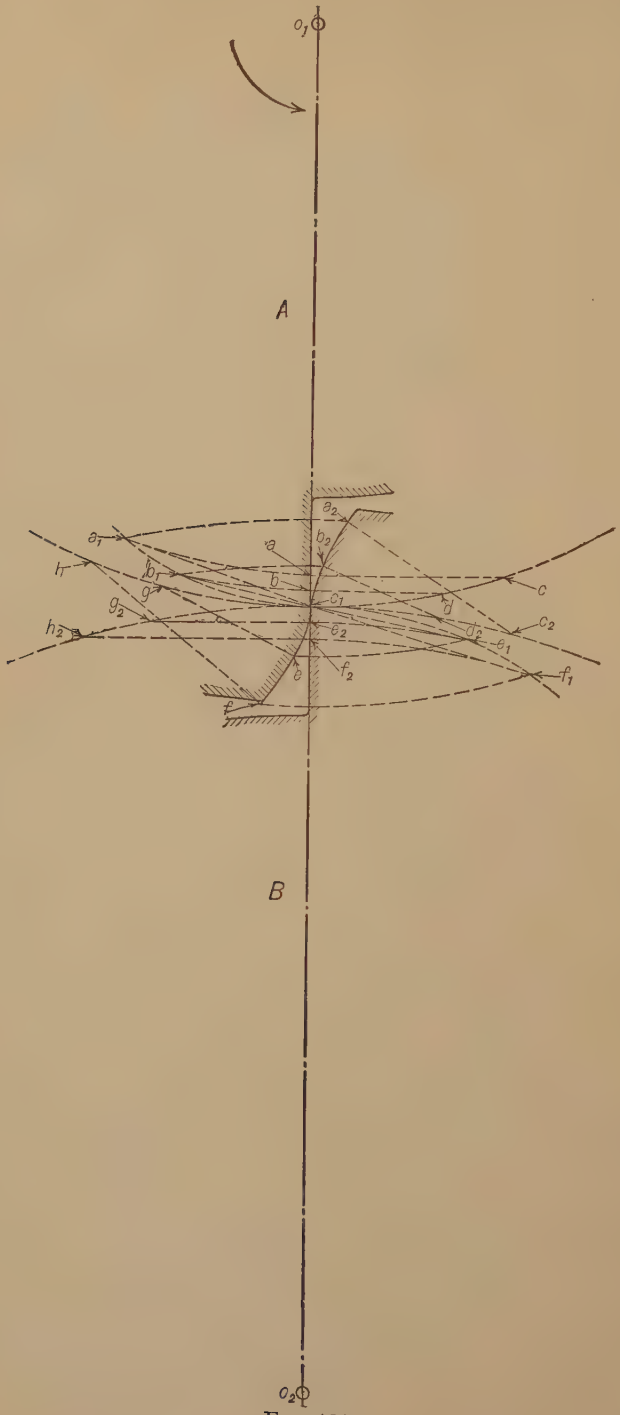

FIG. 131

the given flank with the desired face, is a point on this face when the pitch circles of the wheels are moved backward an arc equal to c_1d. Moving them forward the same distance, the point b_1 and normal b_1c_1, moving with the wheel B, will be found at b_2 and b_2d_2. This process may be continued for as many points as may be needed to give a smooth curve. The curve drawn through the points $a_2b_2c_1$ will be the required face.

A similar process gives the flank of the tooth on the wheel B which will work properly with the given face. The normals taken in the

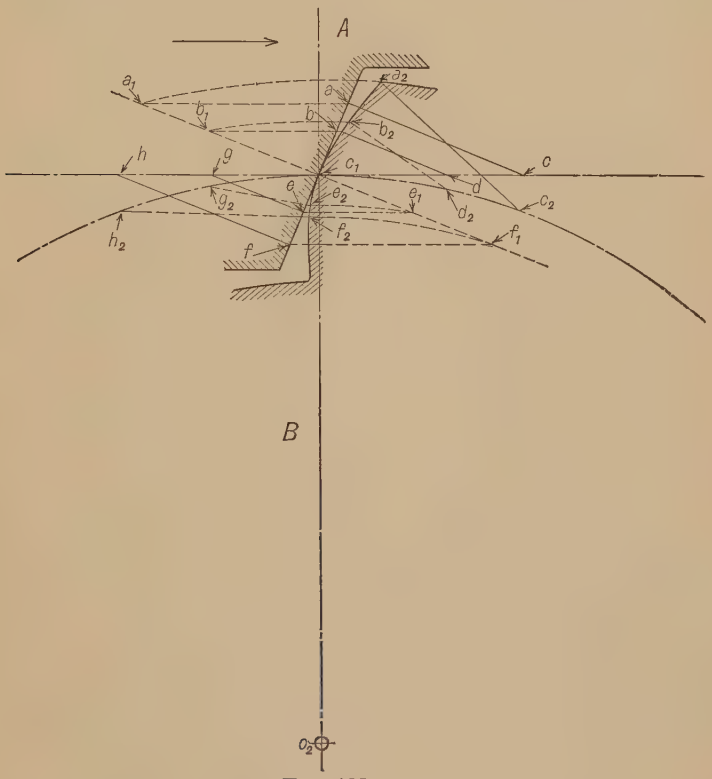

FIG. 132

figure are eg and fh, the positions of e and f when they can be points of contact being e_1 and f_1; and the points on the required flank when in the original position are e_2 and f_2.

A smooth curve passed through the points of contact $a_1b_1c_1e_1f_1$ will be the path of contact, the beginning and end of which will be determined by the addendum circles of B and of A respectively.

Fig. 132 shows the same construction for finding the curve for a pinion tooth conjugate to a given rack tooth.

Another method of solving the above problem is shown in Fig. 133, where o_1 and o_2 are a pair of plates whose edges are shaped to arcs of the given pitch circles AA_1 and BB_1, due allowance being made for a thin strip of metal, gh, connecting the plates, to insure no slipping of their edges on each other.

Attach to o_2 a thin piece of sheet metal, M, the edge of which is shaped to the given curve aa; and to o_1 a piece of paper, D, the piece M being elevated above o_1 to allow space for the free movement of D.

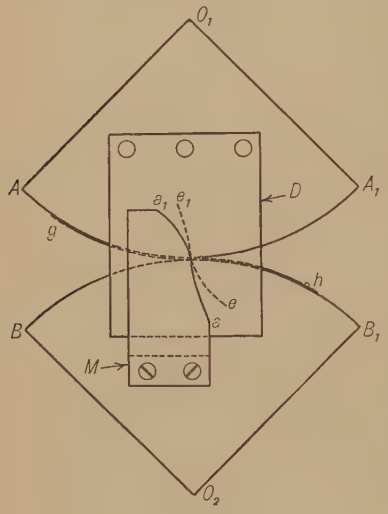

FIG. 133

Now roll the plates together, keeping the metallic strip gh in tension, and, with a fine marking-point, trace upon the paper D, for a sufficient number of positions, the outline of the curve aa_1. A curve just touching all the successive outlines on D, as ee_1, is the corresponding tooth curve for o_1.

125. To Draw the Teeth of a Pair of Gears. When the tooth outlines have been found, and the circular pitch, backlash, addendum, and clearance are known, the teeth may be drawn as shown in Fig. 134. Let MN and RT be the known tooth outlines for the gears A and B respectively. To draw three teeth on each gear, one pair of which shall be in contact at the pitch point. Assume no backlash and the width of the teeth equal to the spaces on the pitch circles. Draw the addendum circles of each with radius equal to radius of pitch circle plus addendum. Draw root circle of each with radius equal to radius of pitch circle minus (addendum of other gear plus clearance). Space off the circular pitch on either side of P on each pitch circle. This may be conveniently done by drawing a line tangent to the pitch circles at P, laying off the circular pitch PC and PC_1 on this line. Set the dividers at some small distance such that when spaced on the pitch circles the length of arc and chord will be nearly the same. Start at C, step back on CP until the point of the dividers comes nearly to P (say at K) then step back on the pitch circles the same number of spaces, getting H and L. H_1 and L_1 can be found in the same manner.

Through the point J, where the curve RT cuts the pitch circle of B, draw the radial line cutting the addendum circle at V. Make arc WX

equal to arc VR. Cut a templet or find a place on a French curve which fits the curve RJT, mark it, and transfer the curve to pass through X and P. Make PH_2 equal to one half PH_1, turn the curve over and draw

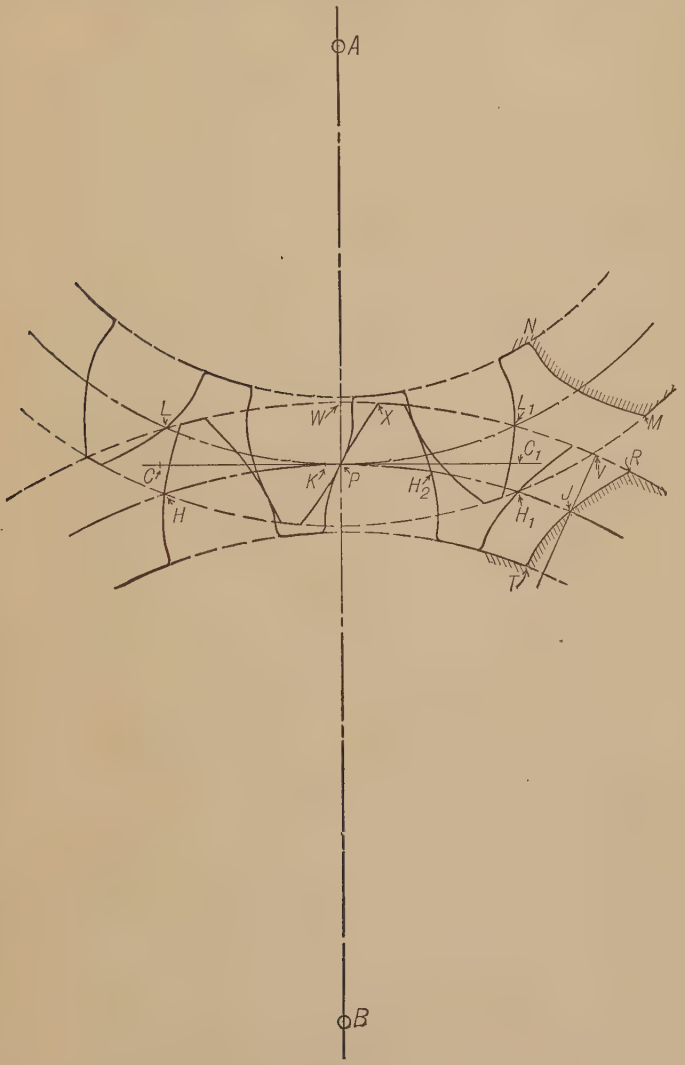

FIG. 134

curve through H_2 in the same way that PX was drawn. All the other curves may be drawn in a similar way.

126. Clearing Curve. If the flanks are extended until they join the root line, a very weak tooth will often result; to avoid this, a

fillet is used which is limited by the arc of a circle connecting the root line with the flank, and lying outside the actual path of the end of the face of the other wheel. This actual path of the end of the face is called the **true clearing curve.**

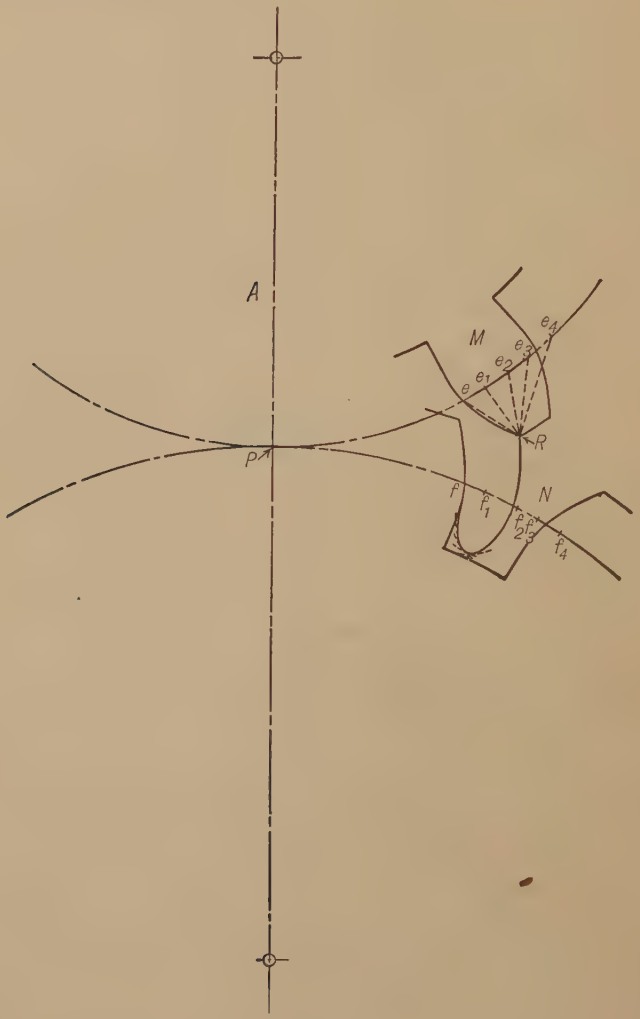

FIG. 135

This curve is the **epitrochoid** traced by the outermost corner of one tooth on the plane of the other gear. The general method of drawing such a curve is shown in Fig. 135. The tooth M is to work in the space N. From e lay off the equal arcs ee_1, e_1e_2, e_2e_3, etc., and from f lay off

the same distance ff_1, ff_2, etc. From f, f_1, f_2, etc., draw arcs with the radii eR, e_1R, e_2R, etc., respectively. A smooth curve internally tangent to all these curves will be the desired epitrochoid or clearing curve.

127. The Involute of a Circle. The form of the curve most commonly given to gear teeth is that known as the involute of a circle. Teeth properly constructed with this curve will conform to the law described in § 122 as will appear in the following paragraphs. This curve and the method of drawing it will, therefore, be studied before considering the method of applying it to gear teeth.

In Fig. 136 the circle represents the end view of a cylinder around which is wrapped an inextensible fine thread, fastened to the cylinder at A and having a pencil in a loop at P. If now the pencil is swung out so as to unwind the thread from the cylinder, keeping it always taut, the curve which the pencil traces on a piece of paper on which the cylinder rests is known as an involute of the circle which represents the end view of the cylinder. The same result is obtained by considering the tracing point to be carried by a line rolling on a circle. All involutes drawn from the same circle are alike, but involutes drawn from circles of different diameters are different. The greater the diameter of the circle the flatter will be its involute.

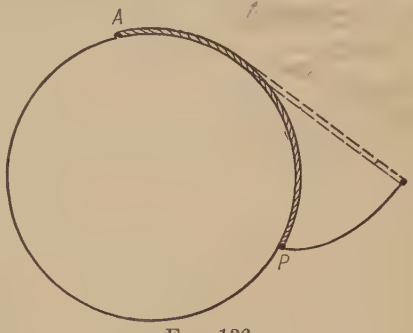

FIG. 136

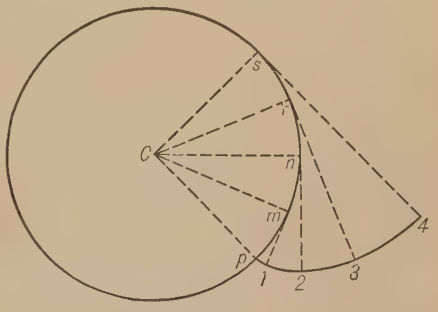

FIG. 137

In constructing the involute of a circle on the drawing board it is, of course, impossible actually to wrap a thread around the circle and draw the involute by unwinding the thread. Fig. 137 shows the method of constructing an involute on the drawing board. Suppose the involute is to be drawn starting from any point p on the circle whose center is C. Set the dividers at any convenient short spacing; a distance which is about $\frac{1}{24}$ the circumference of the circle will give good results. Place one of the points of the dividers at p and space along on the circumference a few times, getting the equidistant points m, n, r, s. At each of these points draw radial lines and con-

struct lines perpendicular to these radii as shown. Each of these perpendiculars will then be tangent to the circle at one of the points. Taking care that the setting of the dividers remains unchanged, lay off one space $m1$ on the tangent at m. On the next line, which is tangent at n, lay off from n the same distance twice, getting the point 2. From r lay off the distance three times, getting the point 3; and so on until points are found as far out as desired. A smooth curve drawn through these points with a French curve will be a very close approximation to the true involute, — close enough for all practical purposes if the work is done carefully.

128. Application of the Involute to Gears. In Fig. 138 let A and B be the centers of two gears whose pitch circles are tangent at P. Through

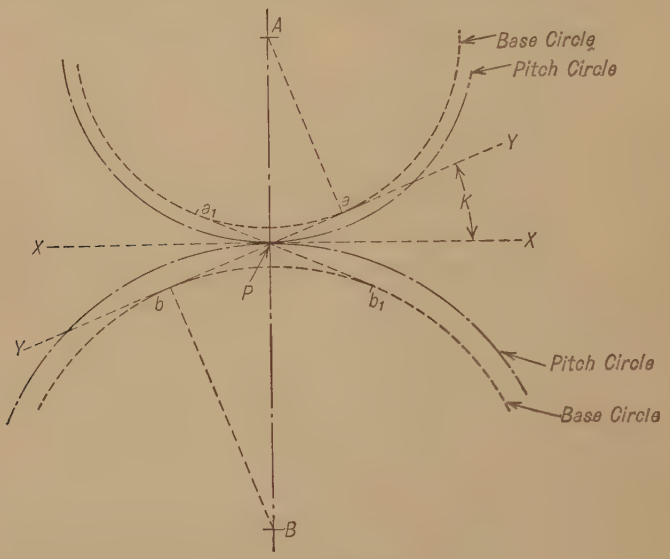

FIG. 138

P draw a line XX perpendicular to the line of centers AB and another line YY making an angle K with XX. From A draw a line Aa perpendicular to YY and from B draw Bb also perpendicular to YY. Then Aa and Bb will be the radii of circles drawn from A and B respectively, tangent to YY. These circles are called base circles. The triangle AaP is similar to the triangle BbP, therefore, $\frac{Aa}{AP} = \frac{Bb}{BP}$. That is, the radii of the base circles are in the same ratio as the radii of the pitch circles. Therefore, since

$$\frac{\text{Angular speed of } A}{\text{Angular speed of } B} = \frac{BP}{AP},$$

it follows that

$$\frac{\text{Angular speed of } A}{\text{Angular speed of } B} = \frac{Bb}{Aa}.$$

If now the tooth outlines on the gear A are made involutes of the circle whose radius is Aa and those on B involutes of the circle whose radius is Bb, a tooth on A will drive a tooth on B in such a way that at all times the angular speed of A will be to the angular speed of B as Bb is to Aa, the action being the same as if the lines ab and a_1b_1 were inextensible cords connecting the base circles and the involutes were curves traced by marking points on the cords. The same ratio of speeds would hold if B were the driver. The teeth would always be in contact at a point on the line aPb or at a point on a_1Pb_1. The path of contact in gears having involute teeth is, therefore, a straight line and the angle of obliquity or pressure angle is constant. That is, the direction of the force which the driving tooth exerts on the driven tooth is the same at all times.

129. To Draw a Pair of Involute Gears. Suppose that it is required to draw a pair of involute gears 4-pitch, 16 teeth in the driver and 12 teeth in the driven gear; addendum on each to be $\frac{1}{4}$ in. and dedendum $\frac{9}{32}$ in.; pressure angle $\theta = 22\frac{1}{2}°$.

One-half of one gear and 4 teeth on the other will be drawn. In Fig. 139 draw a center line and on this line choose a point S which is to be the center of the driving gear. To find the distance between centers and thus locate the center of the other gear, first find the pitch diameter of each. Since the driver has 16 teeth and is 4-pitch (that is, it has 4 teeth for every inch of pitch diameter), its pitch diameter must be $16 \div 4$ or 4 in. In like manner the diameter of the other gear is $12 \div 4$ or 3 in. The distance between centers must be equal to the radius of the driver plus the radius of the driven gear and is, therefore, $2 + 1\frac{1}{2}$ in. or $3\frac{1}{2}$ in. Measure off the distance SS_1 equal to $3\frac{1}{2}$ in. and S_1 is the center of the driven gear. Next, locate the pitch point P, 2 in. from S or $1\frac{1}{2}$ in. from S_1, and through P draw arcs of circles with S and S_1 as centers. These arcs are parts of the pitch circles of the two gears. Through P draw the line XX perpendicular to the line of centers and draw the line YY making an angle of $22\frac{1}{2}°$ with XX. From S and S_1 draw lines perpendicular to YY meeting it at a and b. With radii Sa and S_1b draw the base circles. Draw the addendum circle of the upper gear with S as a center and radius equal to the radius of the pitch circle plus the addendum distance. This will be $2\frac{1}{4}$ in. In similar manner draw the addendum circle of the lower gear with a radius $1\frac{3}{4}$ in. Draw the root circle of the upper gear with S as a center and radius $2 - \frac{9}{32}$ in. (that is pitch radius − dedendum). Find the root circle of the lower gear in a similar way. We are now ready to construct the teeth.

From the point a space off on the base circle the arc at equal in length to the line aP and from t, thus found, draw the involute of the base circle of the upper gear as described for Fig. 137. tPk is the curve thus found. In a similar manner find the point r such that arc br is equal in length to the line bP and from r draw the involute rPn of the lower base circle.

The shape of the tooth curves having been found in this way, the next step is to find the width of the teeth on the pitch circles and draw in the remaining curves. Since the gears are 4-pitch, the circular pitch

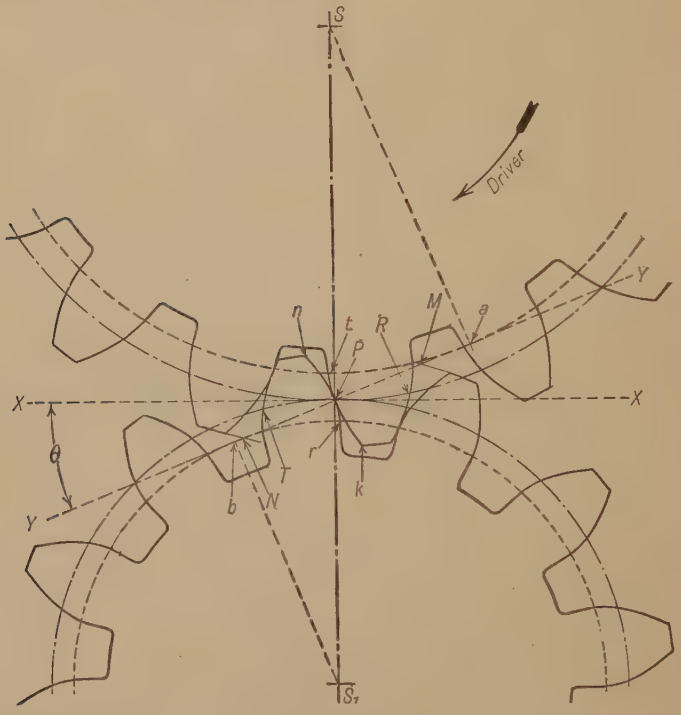

Fig. 139

is $\frac{1}{4} \times 3.1416 = 0.7854$ in. and if the width of the tooth is one-half the circular pitch, as is usually the case, the width of the tooth on each gear must be $\frac{1}{2} \times 0.7854$ or 0.39 in. nearly. Therefore, lay off the arc PR equal to 0.39 in. and through R draw an involute which is a duplicate of the curve tPk except that it is turned in the reverse direction. Similarly make PT equal 0.39 and draw an involute through T which is a duplicate of the curve nPr. These curves can be transferred to the new positions by means of templets, it being unnecessary to construct the curve more than once. The part of the tooth outlines below the base

circles may be made radial lines with small fillets at the bottom corners. One tooth on each gear has now been completed and other teeth may be drawn like these by means of templets.

If the larger gear is the driver and turns in the direction indicated by the arrow, the path of contact is the line MPN.

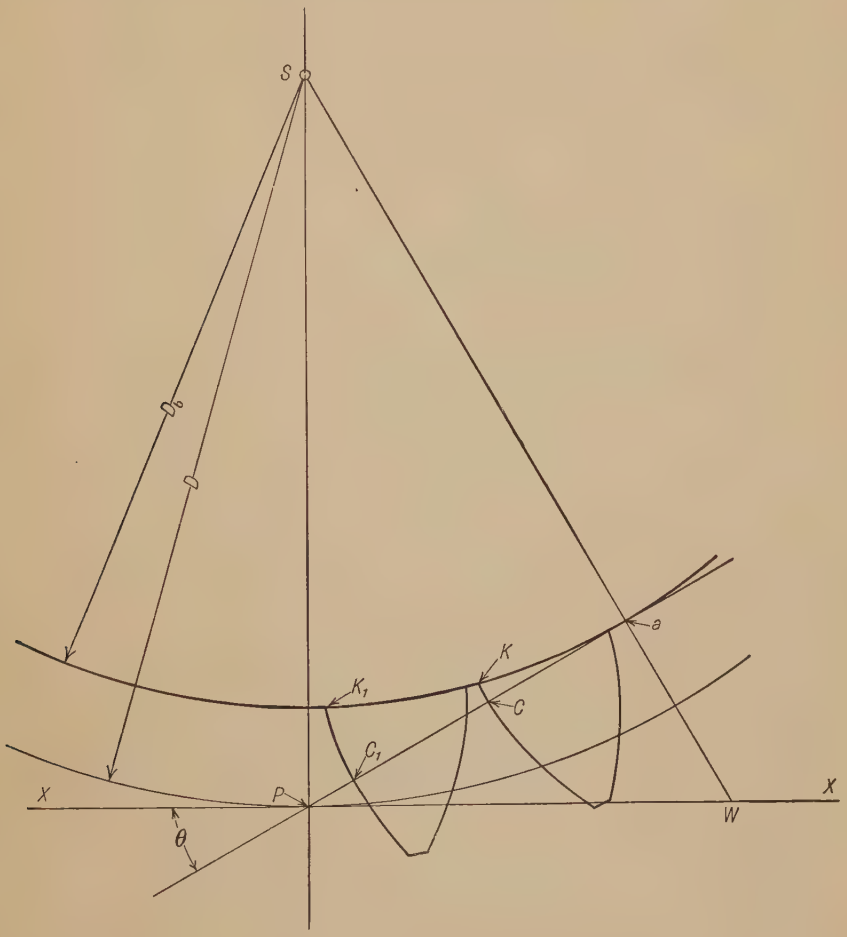

FIG. 140

130. Normal Pitch. The normal pitch is the distance from one tooth to the corresponding side of the next tooth, measured on the common normal (CC_1, Fig. 140). From the method of generating the curves this distance is constant and is equal to the distance between the corresponding sides of two adjacent teeth measured on the base circle (arc KK_1, Fig. 140).

The definite quantities in a given involute gear are the base circle and the normal pitch.

131. Relation between Normal Pitch and Circular Pitch. Referring to Fig. 140, let D represent the diameter of the pitch circle and D_b the diameter of the base circle. N = normal pitch, C = circular pitch, T the number of teeth, a the point where the line of obliquity (or generating line) is tangent to the base circle, and θ the pressure angle. Draw Sa and produce it to meet XX (the tangent to the pitch circle through P) at W. Angle aSP = angle aPW = θ, and the triangles aPW and aSP, are similar.

Therefore, $$\frac{aS}{SP} = \cos\theta.$$

From the definition of normal pitch (§ 130)

$$N = \frac{\pi D_b}{T}$$

and from equation (44)

$$C = \frac{\pi D}{T}.$$

Therefore, $$\frac{N}{C} = \frac{D_b}{D} = \cos\theta. \qquad (50)$$

That is, *the normal pitch is equal to the circular pitch multiplied by the cosine of the pressure angle.*

132. Relation between Length of Path of Contact and Length of Arc of Contact. In Fig. 141 the teeth shown in full lines are in contact at the beginning of the path of contact and the teeth shown dotted are at the end of the path of contact.

The angle α is therefore the angle of action on the driven gear and arc NPM is the arc of action. The corresponding arc of the base circle is LK.

As previously shown,

$$\frac{\text{Radius base circle}}{\text{Radius pitch circle}} = \cos\theta.$$

Therefore, $$\frac{\text{arc } LK}{\text{arc } NM} = \cos\theta.$$

But, from the properties of the involute, considering the line ab as the connecting line between the two revolving base circles, the length of the line TT_1 (that is, the path of contact) is equal to the length of the arc LK.

Therefore, arc $$\frac{TT_1}{NM} = \cos\theta. \qquad (51)$$

That is, *the path of contact is equal to the arc of contact multiplied by the cosine of the pressure angle.*

A convenient method for finding this relation graphically is as follows: Draw XX tangent to the pitch circles at P. From T and T_1 draw TR

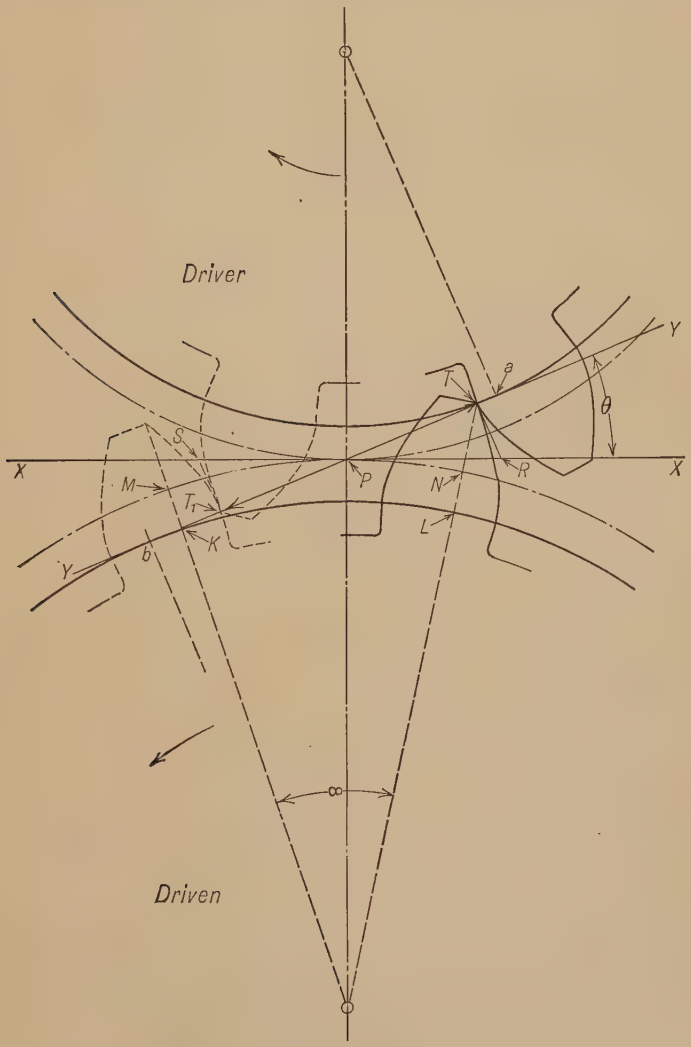

Fig. 141

and T_1S perpendicular to TT_1, meeting XX at R and S. The length RS is then equal to the length of the arc of action, RP being the length of the arc of approach and PS the length of the arc of recess.

Conversely, if the lengths of the arcs of approach and recess are known, the ends of the paths of contact may be found by laying off the arcs along XX and drawing perpendiculars to ab.

133. Limits of Addendum on Involute Gears. Fig. 141 shows one tooth on each of a pair of 4-pitch gears of 18 and 24 teeth respectively.

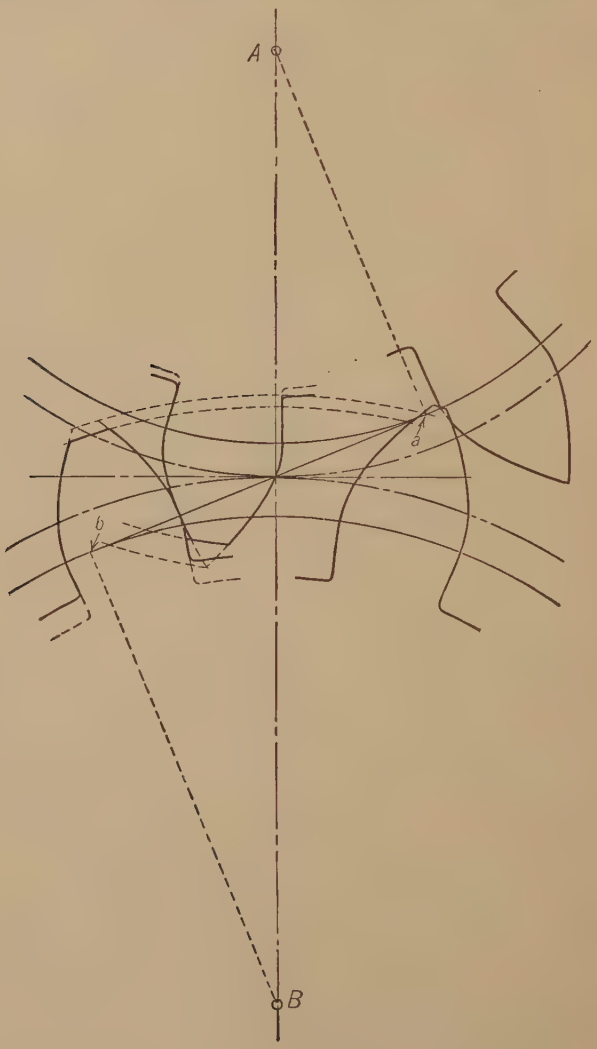

FIG. 142

The addendum arcs of the teeth, shown in full lines, are such that the addendum distance is equal to $\frac{7}{8}$ the module ($\frac{7}{32}$ in.). If for any reason it is desired to redesign these gears with longer teeth, that is, with larger

addendum circles, it will be necessary to know how long the teeth can be made without causing trouble. The tooth on B can be increased in length until the addendum circle passes through the point a, where the line of obliquity YY is tangent to the base circle of A. If the tooth is made longer than this limit, interference will result unless some special form of curve is constructed in place of the involute for the outer end of the tooth.

At the right of Fig. 142 are shown the same pair of teeth with the addendum of gear B lengthened so that the addendum circle is outside of point a. It will be noticed that the extended face of the tooth

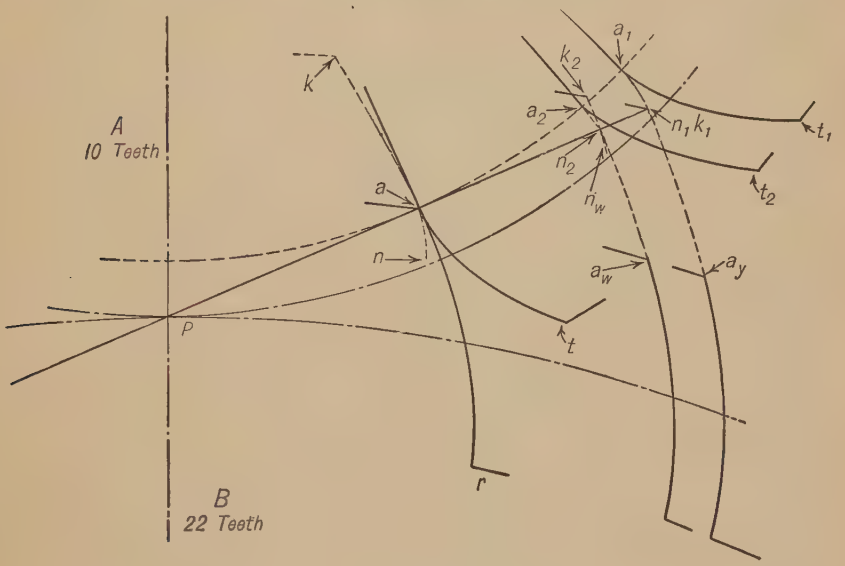

Fig. 142a

of B cuts into the radial extension of the flank of the tooth on A and also cuts slightly into that part of the tooth outside the base circle.

To show that interference of this sort occurs refer to Fig. 142a where a 22-tooth gear B is shown working with a 10-tooth pinion A. P is the pitch point, a the point where the base circle of the pinion is tangent to the line of obliquity. If the addendum of the gear B is carried beyond a (say, to k) the conjugate to the line ak is the involute na of the pinion base circle and lies in the space between the pinion teeth. To see that this is true assume that the line of obliquity is a cord carrying a point which traces the involutes (see § 128) and, instead of wrapping around the base circle of the pinion, is tangent to it at a and extends beyond

carrying a marking point at n_1. As the gear B turns to the left the cord, by its contact at a, turns the base circle of the pinion right-handed, the tracing point n_1 traces the outline k_1a_v (same as ka) on the plane of the gear B and the curve n_1a_1 (same as na) on the plane of the pinion A.

Next, to show that the curve k_1a_v will cut into curve a_1t_1 (the regular pinion tooth) as the tracing point approaches a, assume the tracing point to be at n_2. The curve k_2a_w (same as ka) will be tangent to a_2n_w (same as an) at n_2. Now a_2t_2 is tangent to a_2n_w at a_2. Therefore, since k_2a_w and a_2t_2 are tangent to the same curve a_2n_w at different points, their directions must be such that they tend to intersect. In the figure the interference is evident. When the tracing point reaches a the interference ceases.

The above consideration shows that while the common normal will trace conjugate curves beyond a, it is impossible to get proper action for that portion of the tooth outline kar outside of a, first because the conjugate to ka lies inside the tooth of which kar is the outline, and second because the part of the tooth of which ka is the outline cuts into the tooth outline at.

Referring again to Fig. 142, the tooth on A might be lengthened until the addendum circle passed through the point of tangency b except for the fact that there is another limit to the addendum which sometimes has to be considered. The maximum addendum here is limited by the intersection of the two sides of the tooth giving a pointed tooth. It is evident that no further increase in addendum is here possible.

The following illustration will help to make the above statements clear.

In Fig. 143 let it be required to determine if the arc of recess can be equal to $\frac{3}{4}$ of the circular pitch. Lay off from a on the tangent the distance $ab = \frac{3}{4}$ of the circular pitch. Draw bc perpendicular to the line of obliquity; c will be the end of the path of contact for the given arc of recess. If the point c came beyond d, the tangent point of the line of obliquity and the base circle, the action would be impossible since no contact can occur beyond d. But if, as in Fig. 143, the point c comes between a and d, it is necessary to determine if the face of the tooth on A can reach to c. Lay off on the pitch circle A the arc $ae = ab = \frac{3}{4}$ of the pitch; the face of the tooth on A will then pass through c and e. Draw the line co from c to the center of A, and note the point f where it cuts the pitch circle A. If ef is less than one-half the thickness of the tooth, the action can go as far as c and the teeth will not be pointed. In the figure, assuming tooth and space equal, the thickness of the tooth would be eg, and ef is less than $\frac{1}{2}\ eg$; therefore the action is possible, as is shown by the two teeth drawn in contact at c.

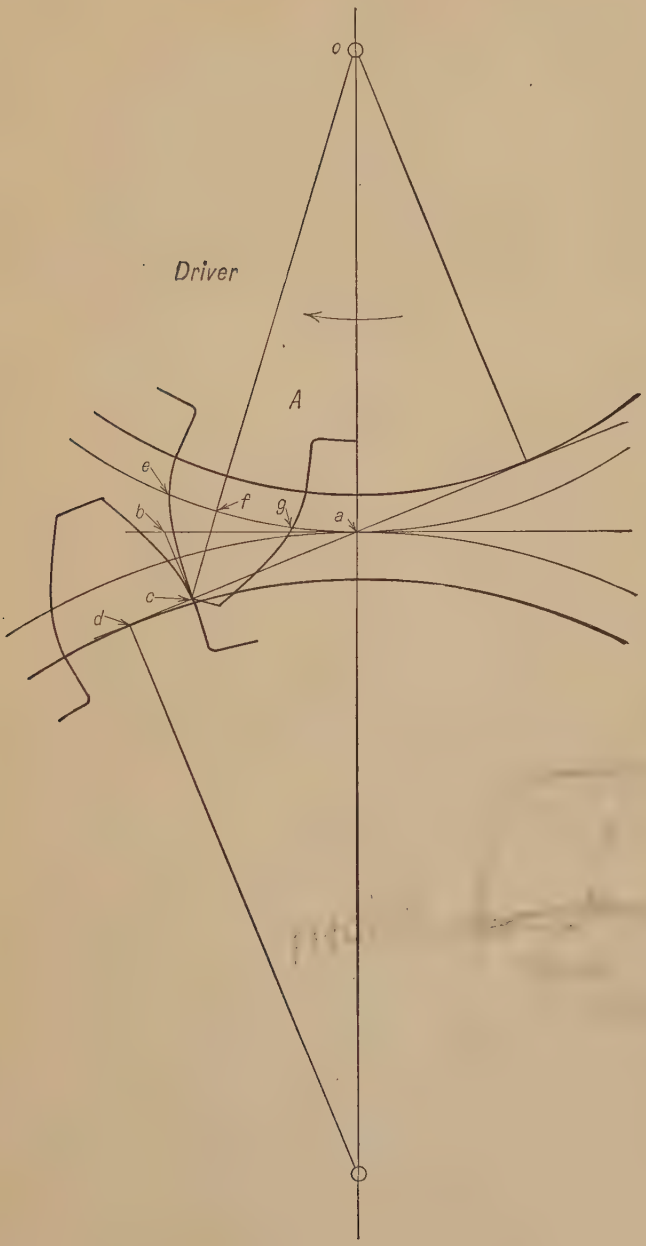

FIG. 143

134. Involute Pinion and Rack. Fig. 144 shows a pinion driving a rack. The path of contact cannot begin before the point a, but the recess is not limited excepting by the addendum of the pinion, since the base line of the rack is tangent to the line of obliquity at infinity. For the same reason it will be evident that the sides of the teeth of the rack will be *straight lines* perpendicular to the line of obliquity. In the figure the addendum on the rack is made as much as the pinion will allow, that is, so that the path of contact will begin at a. The addendum of the pinion will give the end of the path of contact at b.

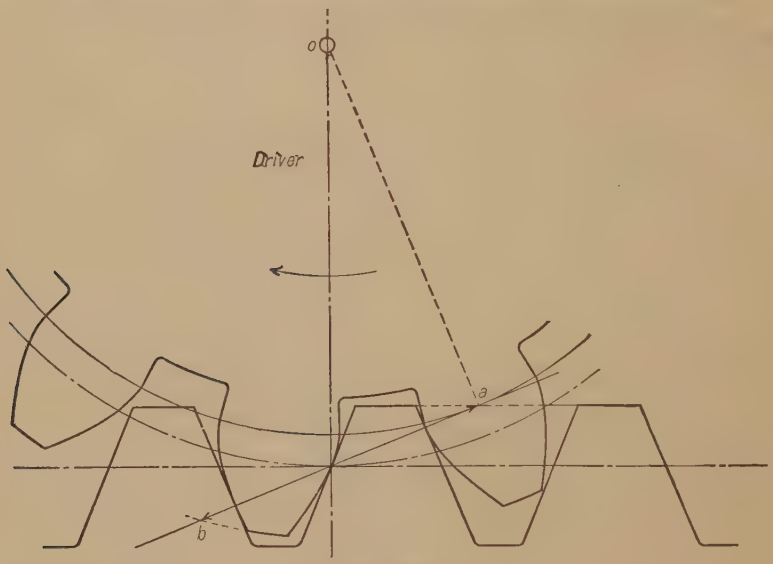

FIG. 144

In Fig. 145, the diagram for a pinion and a rack, let it be required to determine if the path of contact can begin at a and go as far as b; to be solved without using the tooth curves. For the contact to begin at a the face of the rack must reach to a. Draw the line ac perpendicular to the line of obliquity, giving cd as the arc of approach; draw ae parallel to the line of centers, and if ce is less than one-half the thickness of the rack tooth, the approaching action is possible without pointed teeth. Similarly for the recess, draw the line bf perpendicular to the line of obliquity, giving df equal to the arc of recess; make the arc dg on the pinion's pitch circle equal to df, then the face of the pinion's tooth will pass through b and g; draw the line bh to the center of the pinion, and note the point h where it crosses the pinion's pitch circle. If gh is less than one-half the thickness of the tooth, the recess is possible without pointed teeth.

135. Involute Pinion and Annular Wheel. Fig. 146 shows an involute pinion driving an annular wheel. This case is very similar to a pinion and rack. The addendum of the annular is limited by the tangent point a of the pinion's base circle and the line of obliquity, while the addendum of the pinion is unlimited except by the teeth becoming pointed. The base circle of the annular lies inside the annular, so that its point of tangency with the line of obliquity is at b. If we take some point on the line of obliquity, as c, and roll the tooth curves as they would appear in contact at that point, the teeth of the annular will be

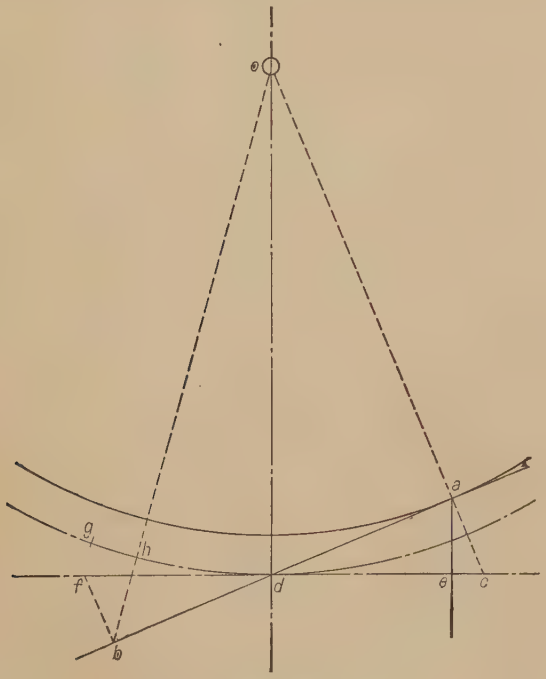

FIG. 145

found to be *concave*, and the addendum of the annular would seem to be limited by the base circle of the annular where the curves end. But if these two teeth are moved back until they are in contact at a, it will be evident that the annular's tooth curve cannot be extended beyond a without interfering with the pinion teeth as in the case of the gear in Fig. 142a. Therefore the addendum of the annular is limited by the point of tangency of the base circle of the pinion and the line of obliquity.

If the ratio of the number of teeth in the pinion to the number of teeth in the annular exceeds a certain limit, interference will occur

between the teeth after they have ceased contact along the path of contact. This is illustrated in Fig. 146a, where an 18-tooth pinion is shown

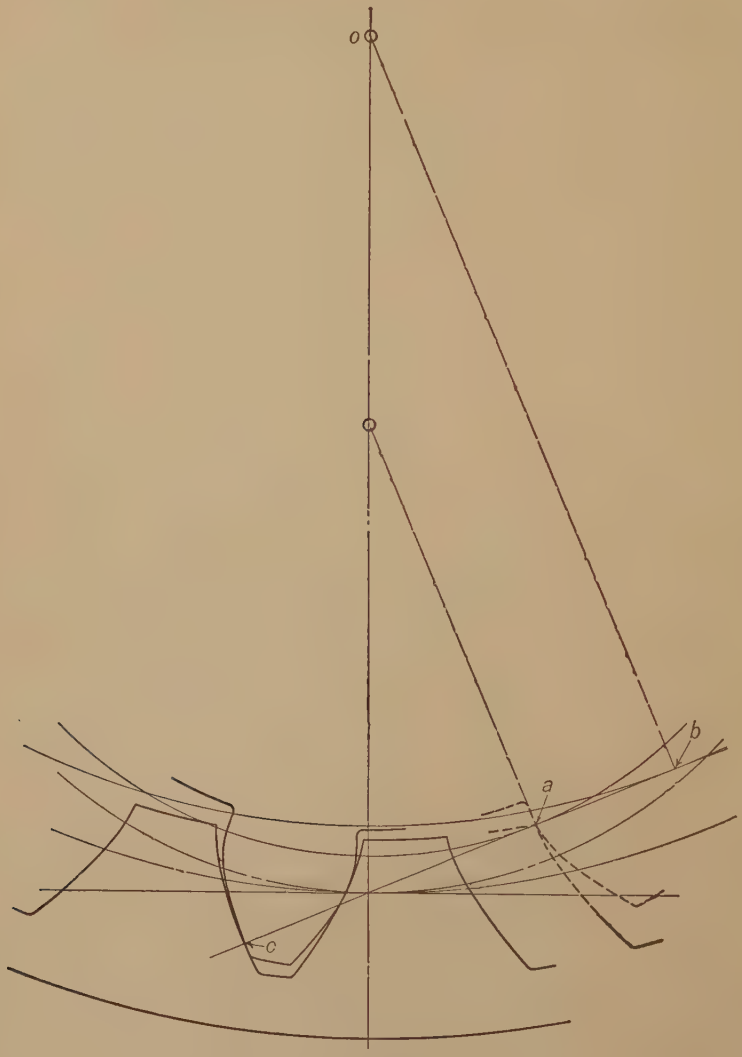

Fig. 146

with a 24-tooth annular of $14\frac{1}{2}°$ obliquity. Their teeth are shown interfering at K.

The limiting size of the pinion at which this interference begins to be evident is a function of the angle of obliquity.

136. Possibility of Separating two Involute Wheels. Interchangeable Gears. One of the most important features of involute gearing is the fact that two such wheels may be *separated*, within limits, without destroying the accuracy of the angular speed ratio. In this way the backlash may be adjusted, since the original pitch circles need not be in contact. To show that this is so, the gears shown in Fig. 147 may be redrawn using the same pitch circles and base circles, but separating them slightly, keeping the teeth in contact, as has been done in Fig. 148. Connect the base circles by the tangent *bc*. If now the line *bc* carries a marking-point, it will evidently trace the involutes of the two base circles, as *de* and *he*, and these curves must be the same as the tooth

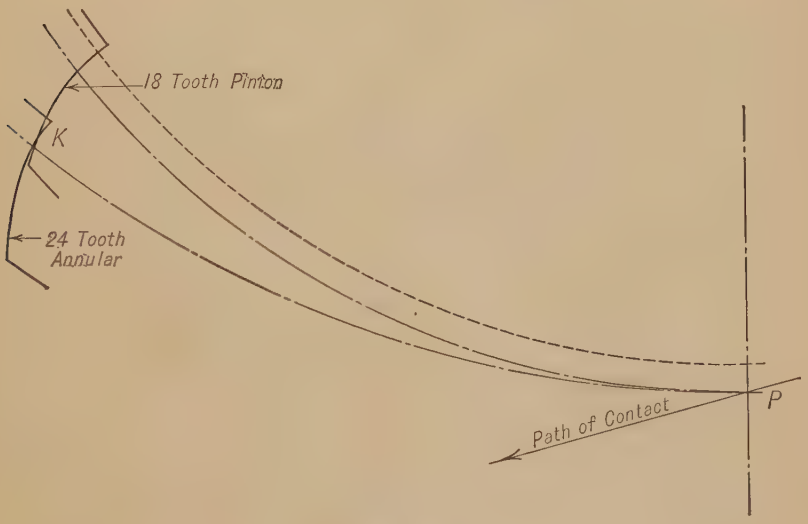

FIG. 146a

curves in Fig. 147. In Fig. 148 these curves *de* and *he* will give an angular speed ratio to the base circles inversely as their radii, but the radii of these base circles are directly as the radii of the original pitch circles (Fig. 147); hence in Fig. 148 the tooth curves *de* and *he* would give an angular speed ratio to the two wheels inversely as the radii of the original pitch circles, although these circles do not touch. The path of contact is now from *k* to *e*, which is considerably shorter than in Fig. 147; it is, however, slightly more than the normal pitch, so that the action is still sufficient. The limit of the separation will be when the path of contact is just equal to the normal pitch. The pressure angle is *bam*, which is greater than in Fig. 147. The backlash has also increased.

The wheels have new pitch circles in contact at a, and a new angle of obliquity or pressure angle, also a greater circular pitch with a certain

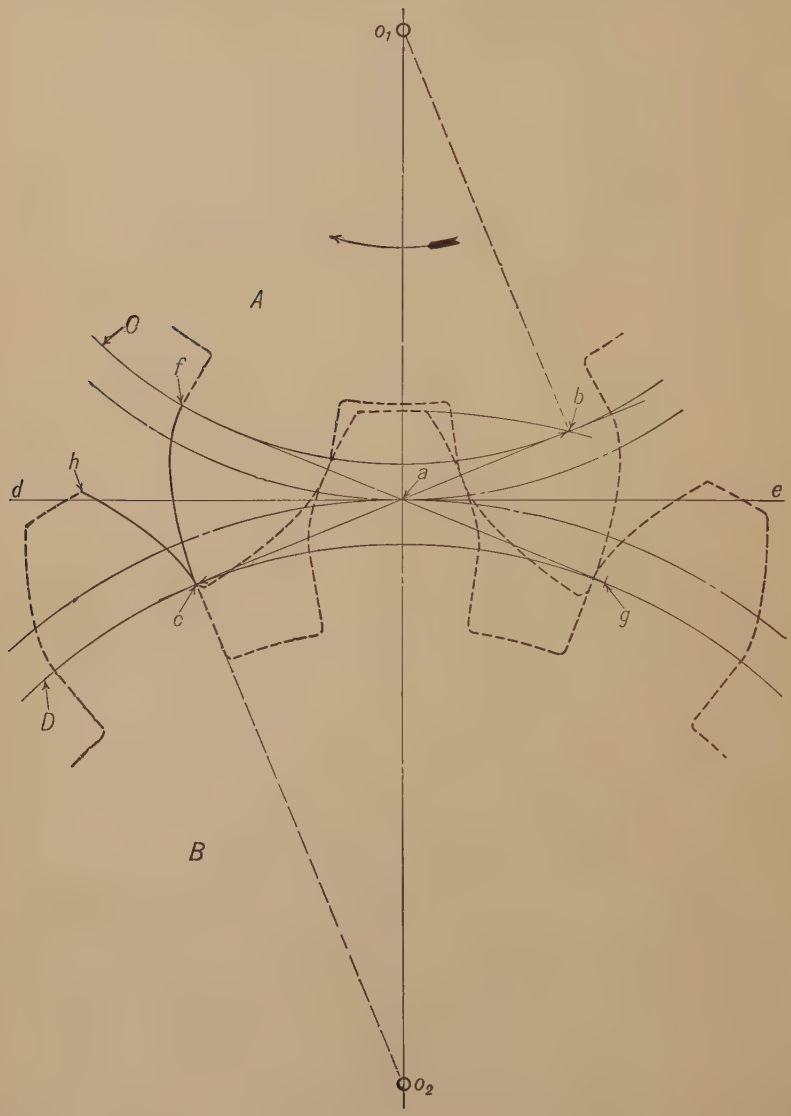

FIG. 147

amount of backlash; and if these latter data had been chosen at first the result would have been exactly the same wheels as in Fig. 147, slightly separated. It will be seen that the radii of the new pitch circles are to

each other as the radii of the respective base circles, and consequently as the respective original pitch circles. It will also be seen that the

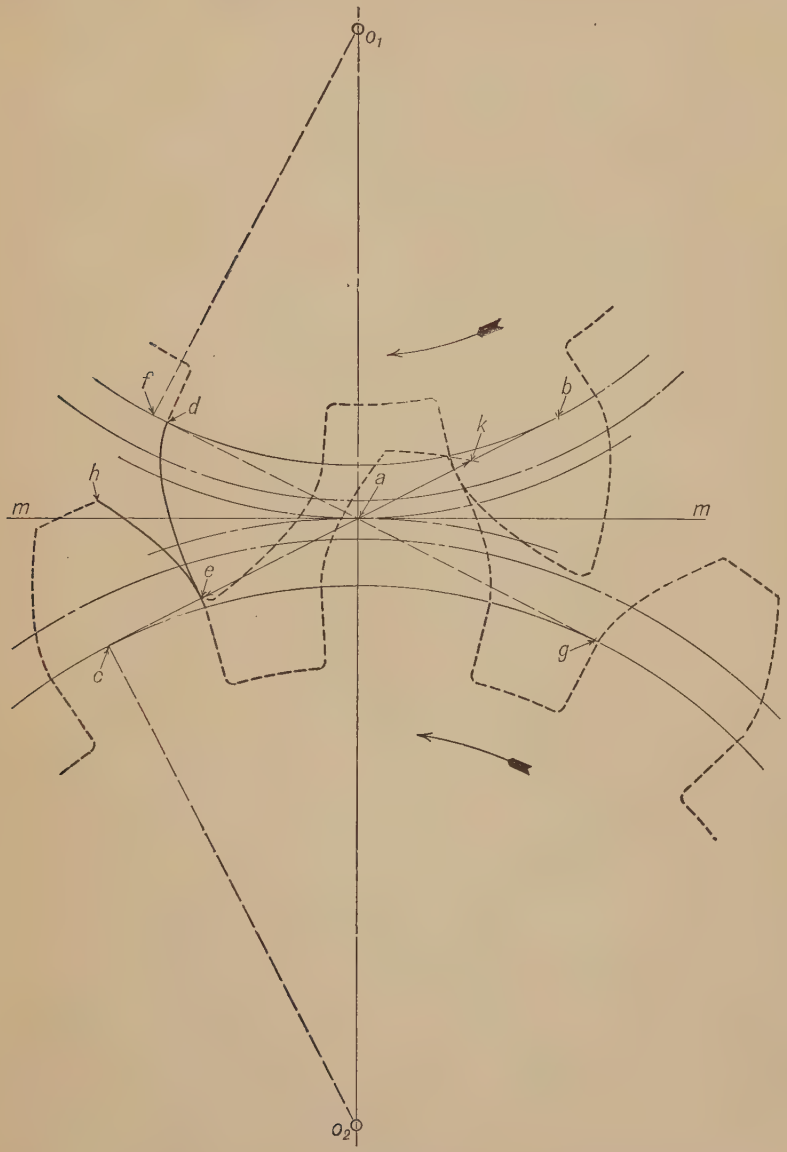

FIG. 148

line of obliquity, which is the common normal to the tooth curves, passes through the new pitch point *a* so that the fundamental law of gearing is still fulfilled.

By the application of the preceding principles two or more wheels of different numbers of teeth, turning about one axis, can be made to gear correctly with one wheel or one rack; or two or more parallel racks with different obliquities of action may be made to gear correctly with one wheel, the normal pitches in each case being the same. Thus differential movements may be obtained which are not possible with teeth of any other form.

In this same connection, attention may be called to the fact that in a set of involute gears which are to be interchangeable the normal pitch must be the same in all.

137. Standard Proportions. There is no one standard governing the relations between pitch, addendum, clearance, etc. Two methods of proportioning the teeth may be mentioned which, for convenience, will be referred to as the **Brown & Sharpe Standard** and the **American Society of Mechanical Engineers Standard.** The Brown & Sharpe standard represents the proportions ordinarily used by the Brown & Sharpe Manufacturing Company. Their practice is to modify the form of the tooth curves slightly at the end to avoid interference, or as experience has shown them to be desirable. The A.S.M.E. standard is that proposed in a majority report of a committee appointed to recommend a standard which would be desirable for general adoption.

The following tables give the proportion for the two standards.

TABLE I.—BROWNE & SHARPE STANDARD FOR INVOLUTE GEARS

Angle of obliquity (pressure angle)	$14\frac{1}{2}°$
Addendum	Equal to module
Clearance	Approximately $\frac{1}{6}$ module
Dedendum or root	Approximately $1\frac{1}{6}$ module

TABLE II.—A.S.M.E. STANDARD (PROPOSED) FOR INVOLUTE GEARS

Angle of obliquity (pressure angle)	$22\frac{1}{2}°$
Addendum	$\frac{7}{8}$ module
Clearance	$\frac{1}{8}$ module
Dedendum or root	Equal to module

Another standard, differing slightly from the A.S.M.E. standard, gives the form of tooth known as the *stub* tooth.

138. Cycloidal Gears. Formerly, gear teeth were constructed on the cycloidal system. The faces of the teeth were epicycloids generated on the pitch circles and the flanks hypocycloids generated inside the pitch circles. The involute system has replaced the cycloidal almost

entirely for general purposes, although cycloidal teeth are still used in some special cases.

In Fig. 149 let o_1 and o_2 be the centers of the two wheels A and B, their pitch circles being in contact at the point a. Let the smaller circles C and D, with centers at p_1 and p_2, be placed so that they are tangent to the pitch circles at a. Assume the centers of these four circles to be fixed and that they turn in rolling contact; then if the point a on the

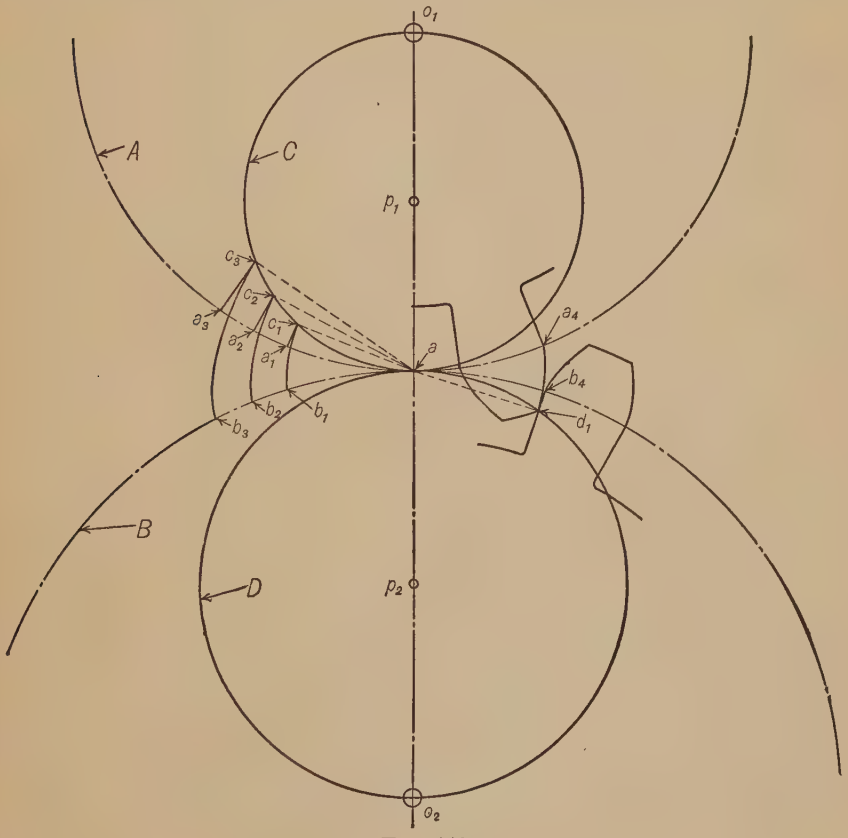

FIG. 149

circle A moves to a_1, a_2, a_3, the same point on B will move to b_1, b_2, b_3, and on C to c_1, c_2, c_3. Now if the point a on the circle C carries a marking-point, in its motion to c_1 it will have traced from the circle A the hypocycloid a_1c_1, and at the same time from the circle B the epicycloid b_1c_1. This can be seen to be true if the circles A and B are now fixed; and if C rolls in A, the point c_1 will roll to a_1, tracing the hypocycloid c_1a_1; while if C rolls on B, c_1 will trace the epicycloid c_1b_1. These two curves

in contact at c_1 fulfil the fundamental law for tooth curves, that the normal to the two curves at the point c_1 must pass through a. Similarly, if the original motion of the circles had been to a_2, b_2, c_2, the same curves would be generated, only they would be longer and in contact at c_2. If the hypocycloid c_2a_2 is taken for the flank of a tooth on A, and the epicycloid c_2b_2 for the face of a tooth on B, and if c_2a_2 drives c_2b_2 toward a, it is evident that these two curves by their sliding action, as they approach the line of centers, will give the same type of motion to the circles as the circles had in generating the curves, which was pure rolling contact. Therefore the two cycloidal curves rolled simultaneously by the describing circle C will cause by their sliding contact the same angular speed ratio of A and B as would be obtained by A and B moving with pure rolling contact.

If now the circles A, B, and D are rolled in the *opposite* direction to that taken for A, B, and C, and if the point a moves to a_4, b_4, and d_1 on the respective circles, the point a on D while moving to d_1 will trace from A the epicycloid a_4d_1, and from B the hypocycloid b_4d_1. The curve a_4d_1 may be the face of a tooth on A, and b_4d_1 the flank of a tooth on B, the normal d_1a to the two curves in contact at d_1 passing through a. The flank and face for the teeth on A and B, respectively, which were previously found, have been added to the face and flank just found, giving the complete outlines, in contact at d_1.

If now the wheel B is turned L.H., the tooth shown on it will drive the tooth on A, giving a constant angular speed ratio between A and B until the face of the tooth on B has come to the end of its action with the flank which it is driving, at about the point c_2.

The following facts will be evident from the foregoing discussion: in the cycloidal system of gearing, *the flank and face which are to act upon each other must be generated by the same describing circle*, but the describing circles for the face and flank of the teeth of one wheel need not be alike. *The path of contact is always on the describing circles;* in Fig. 149 it is along the line d_1ac_1.

139. Interchangeable Wheels. A set of wheels any two of which will gear together are called interchangeable wheels. For these the same describing circle must be used in generating all the faces and flanks. The size of the describing circle depends on the properties of the hypocycloid, which curve forms the flanks of the teeth (excepting in an annular wheel). If the diameter of the describing circle is half that of the pitch circle, the flanks will be radial (Fig. 150, A), which gives a comparatively weak tooth at the root. If the describing circle is made smaller, the hypocycloid curves away from the radius (Fig. 150, B) and will give a strong form of tooth; but if the describing circle

is larger, the hypocycloid will curve the other way, passing inside the radial lines (Fig. 150, *C*) and giving a still weaker form of tooth, and a form of tooth which may be impossible to shape with a milling-cutter.

From the above the practical conclusion would appear to be that the diameter of the describing circle should not be more than one-half that of the pitch circle of the smallest wheel of the set. It will be found, however, that when the diameter of the describing circle is taken five-eighths the diameter of the pitch circle, the curvature of the flanks will not be so great, with the ordinary proportions of height to thickness of teeth, but that the spaces are narrowest at the bottom; this being the case, the teeth can be shaped by a milling-cutter

In one set of wheels in common use the diameter of the describing circle is taken such that it will give radial flanks on a 15-tooth pinion,

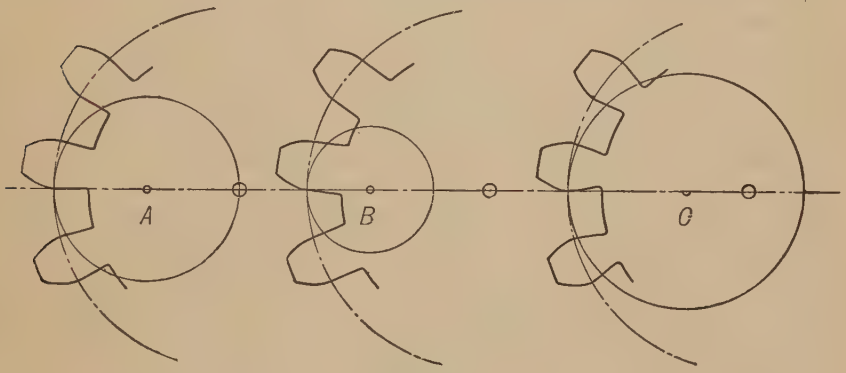

Fig. 150

or five-eighths that of a 12-tooth pinion, the smallest wheel of the set. This describing circle has been used with excellent results.

As an example, given an interchangeable set of cycloidal gears, 2-P., radial flanks on a 15-tooth pinion; a gear having 24 teeth is to drive one having 30 teeth. The diameter of a 2-P., 15-tooth pinion would be $7\frac{1}{2}$ inches; to give radial flanks on this pinion the diameter of the describing circle would be $3\frac{3}{4}$ inches. This is the diameter of the describing circle for all the faces and flanks for any gear of the set. The 24-tooth gear will have a diameter of 12″, and the 30-tooth gear will have 15″ diameter. This will give the diagram in Fig. 151 ready for the rolling of the tooth outlines.

140. To draw the Teeth for a Pair of Cycloidal Wheels, and to determine the Path of Contact. In Fig. 152 given the pitch circles *A* and *B* and the describing circles *C* and *D*, *C* to roll the faces for *B*

and the flanks for A, while D is to roll the faces for A and the flanks for B. These curves may be rolled at any convenient place. In the figure, the wheel A is to be the driver and is to turn as shown. Choose any point, as b, on A and a point a on B at a distance from the pitch point $af = bf$. The epicycloid and hypocycloid rolled from a and b respectively, and shown in contact at b_2, would be suitable for the faces of the teeth on B and the flanks of the teeth on A respectively, and could be in action during approach. The curves may be rolled as indicated by the light lines. The method used to roll these curves is shown in Fig. 153, where the circle C is tracing a hypocycloid on A from the point o. Assume the circle C to start tangent to A at o and to roll as shown, drawing it in as many positions as may be desired to obtain a smooth curve, and these positions do not need to be equidistant; thus in the figure the center of C is at b, c, and d for the three positions used. Since the circle C rolls on A, the distance measured on A from o to a tangent point of C and A is equal to the distance measured on C from that tangent point to the hypocycloid. The method of spacing off these equal arcs for the successive positions is indicated in Fig. 153.

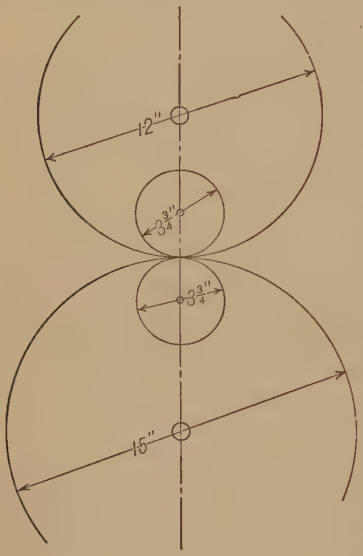

Fig. 151

Returning to Fig. 152, the circle D is to roll the faces for the teeth on A and the flanks for the teeth on B. These curves may also be rolled from any convenient points, as c and d *equidistant from* f. The face thus found from A may be traced and then transferred to the flank already found for the teeth on A at the point b, giving the curve b_2bc', the entire acting side of a tooth on A. Similarly by transferring the flank dd_3 to the point a we have b_2ad', the shape of the teeth for the wheel B. It will be seen that the face on A could have been rolled from b as well as from c, so that the entire tooth curve could be rolled from b, and similarly the other tooth curve could have been rolled from the point a. After finding the tooth curves, and knowing the addendum, clearance, and backlash, the teeth may be drawn. In Fig. 152 the teeth are drawn without backlash, and in contact on their acting surfaces at h and k. The *path of contact* is efg on the describing circles and is limited by the addendum circles.

141. Limits of the Path of Contact. Possibility of Any Desired Action. If, in Fig. 152, the teeth of either wheel are made longer, the path of contact and arc of action are increased; the extreme limit of the path of contact would therefore be when the teeth become pointed.

It is often desirable to find whether a desired arc of action in approach or in recess may be obtained before rolling the tooth curves. Given the pinion A driving the rack B as shown in Fig. 154; to determine if

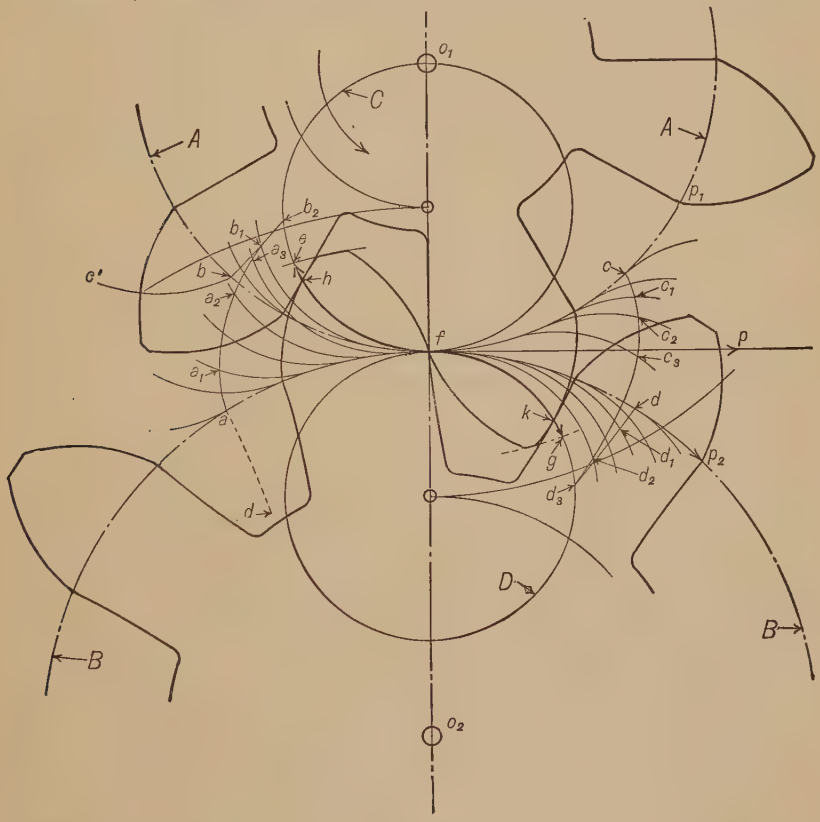

FIG. 152

an arc of approach equal to ab is possible. The path of contact must then begin at c, where the arc ac is equal to ab. The *face* of the *rack's tooth* must be long enough to reach from b to c, and this depends on the thickness of the tooth measured on the pitch line, since the non-acting side of the tooth must not cause the tooth to become pointed before the point c is reached. To see if this is possible without the tooth curves, draw a line from c parallel to the line of centers (in general this line is drawn to the center of the wheel; the rack's center being at infinity gives

the line parallel to the line of centers), and note the point d where this line crosses the pitch line of the rack. If bd were just equal to one-half the thickness of the tooth, the tooth would be pointed at c, and the desired arc of approach would be just possible; if bd were *less* than one-half the thickness of the tooth, the tooth would not become pointed until some point beyond c was reached, so that the action would be possible and the teeth not pointed, as shown by the figure.

If it is desired to have the arc of recess equal to the arc af, then the path of contact must go to g, and the face of the pinion must remain in contact with the flank of the rack until that point is reached, or the face must be long enough to reach from f to g. Drawing a line from g to the center of the pinion A, we find that the distance fh is greater

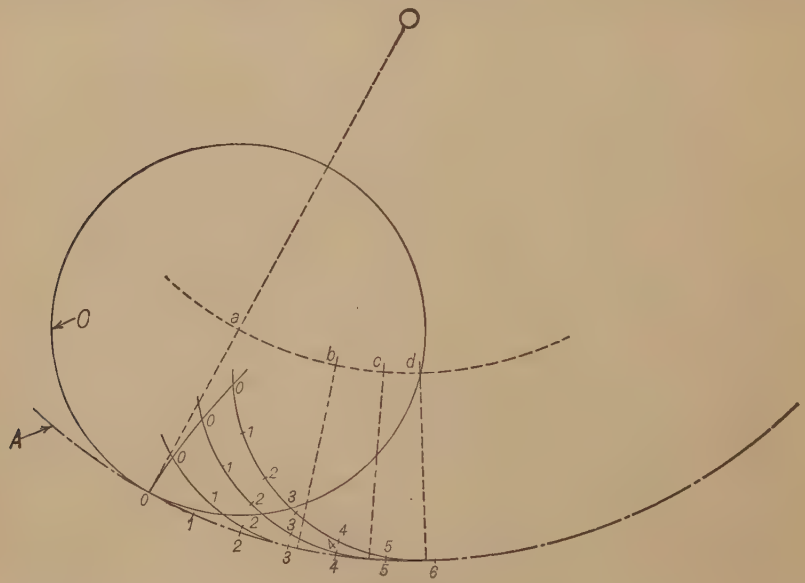

FIG. 153

than one-half of fk, which is taken as the thickness of the tooth; therefore the desired arc of recess is not possible even with pointed teeth.

The minimum arc of action, as in the case of involute gears, is the circular pitch.

142. Annular Wheels. Fig. 155 shows a pinion A driving an annular wheel B, the describing circle C generating the flanks of A and the faces of B, which in an annular wheel lie inside the pitch circle, while D generates the faces of A and the flanks of B. The describing circle C is called the *interior describing circle*, and D is called the *exterior describing circle*. The method of rolling the tooth curves, and the action of

the teeth, are the same as in the case of two external wheels, the path of contact being in this case *efg* when the pinion turns R.H. If these wheels were of an interchangeable set, the describing circles would be alike and found as explained in § 139, and the annular would then gear

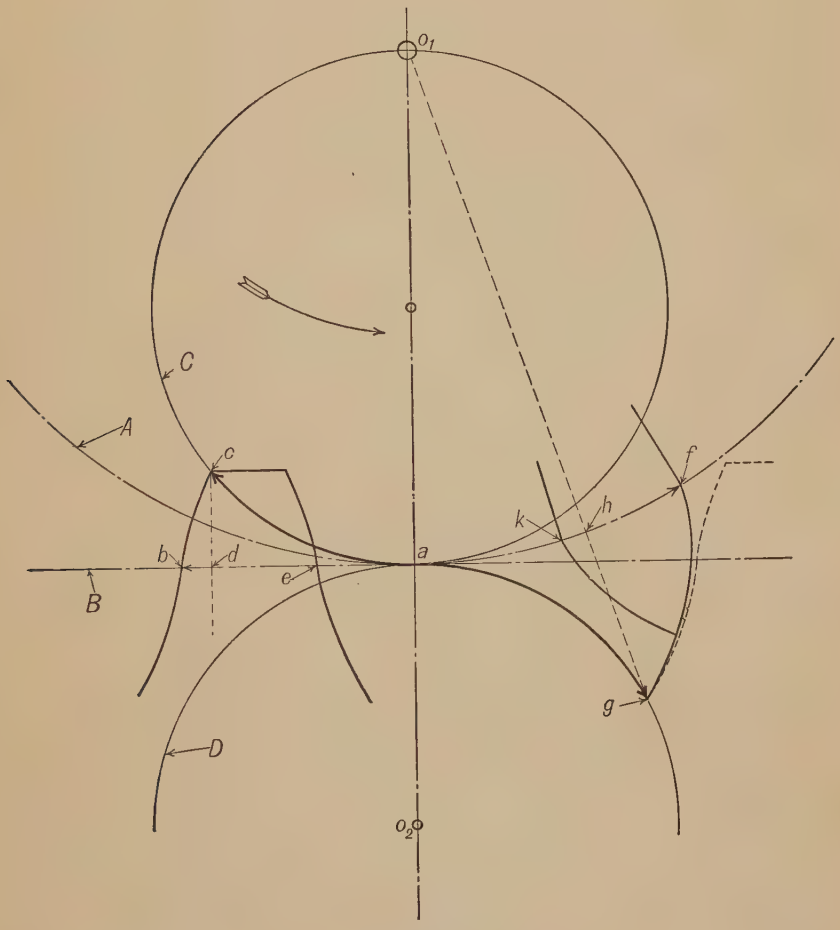

FIG. 154

with any wheel of the set excepting for a limitation which is discussed in the following paragraph.

143. Limitation in the Use of an Annular Wheel of the Cycloidal System. Referring to Fig. 155, it will be evident that, if the pinion drives, the *faces* of the pinion and annular will tend to be rather near each other during recess (during approach also on the non-acting side of the

teeth). The usual conditions are such that the faces do not touch; but the conditions may be such that the faces will touch each other without interference, for a certain arc of recess; or, finally, the conditions may be such that the faces would interfere, which would make the action of the wheels impossible.

To determine whether a given case is possible it is necessary to refer to the double generation of the epicycloid and of the hypocycloid. The acting face of the pinion, Fig. 155, is rolled by the exterior describing circle D, while the acting face of the annular is generated by the interior describing circle C. Two such faces are shown in Fig. 156 as they would appear if rolled from the points g and h, equidistant from the pitch point k. The acting face of A is an epicycloid, and is made by rolling the circle D to the *right* on A. It is also true that a circle whose diameter is equal to the sum of the diameters of A and D would roll the same epicycloid if rolled in the same direction. This circle is E, Fig. 156, and is called the *intermediate describing circle of the pinion.* The acting face of the annular is a hypocycloid rolled by the interior describing circle C rolling to the *left* inside of B. It is also true that the same hypocycloid would be rolled by a circle whose diameter is equal to the difference between the diameters of B and C, *provided it is rolled in the opposite direction.* This circle is F, Fig. 156, and is called the *intermediate describing circle of the annular.*

If now the four circles A, B, E, and F turn in rolling contact, through arcs each equal to kg, the point k will be found at g, h, m, and n on the respective circles, the point k on E having rolled the epicycloid gm, while k on F rolls the hypocycloid hn.

To determine whether these faces do or do not touch or conflict, assume that the given conditions gave the circles E and F coincident as in Fig. 157 where

$$\text{diam.}\, A + \text{diam.}\, D = \text{diam.}\, E = \text{diam.}\, B - \text{diam.}\, C = \text{diam.}\, F.$$

Here if the three circles A, B, and (EF) turn in rolling contact, the point k moving to g on A will move to h on B and to (mn) on the common intermediate circle. This means that the common intermediate circle could simultaneously generate the two faces; therefore the two faces are in perfect contact on the intermediate circle. This contact will continue until the addendum circle of one of the wheels crosses the intermediate circle, the addendum circle crossing first necessarily limiting the path of contact.

The above may be stated as follows: *If the intermediate describing circles of the pinion and annular coincide, the faces will be in contact in recess, if the pinion drives, in addition to the regular path of contact.*

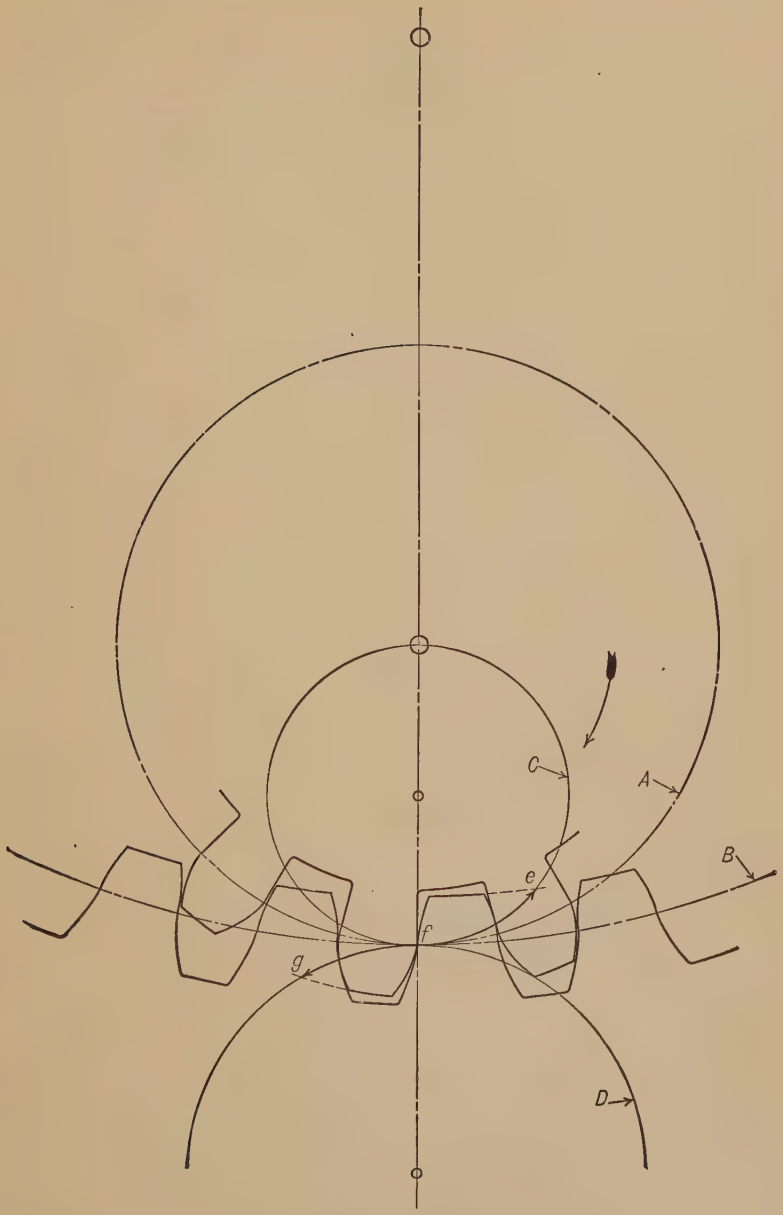

FIG. 155

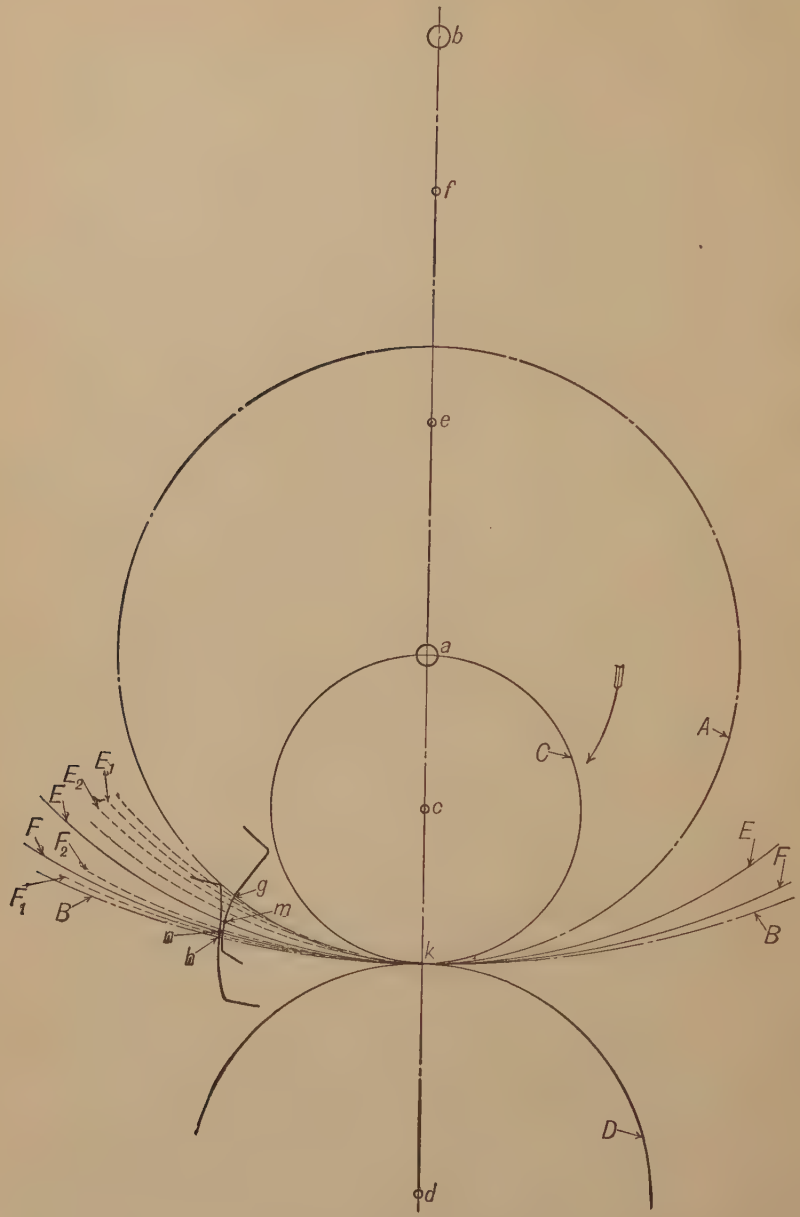

FIG. 156

If in Fig. 157 the exterior describing circle, for example, should be made smaller, as in Fig. 158, then the intermediate of the pinion would be smaller than that of the annular; but if the exterior describing circle is smaller, the face *gm* will have a greater curvature and will evidently curve away from the face *hn*, so that no contact between the faces can occur, as is shown in Fig. 158. Here no additional path of contact

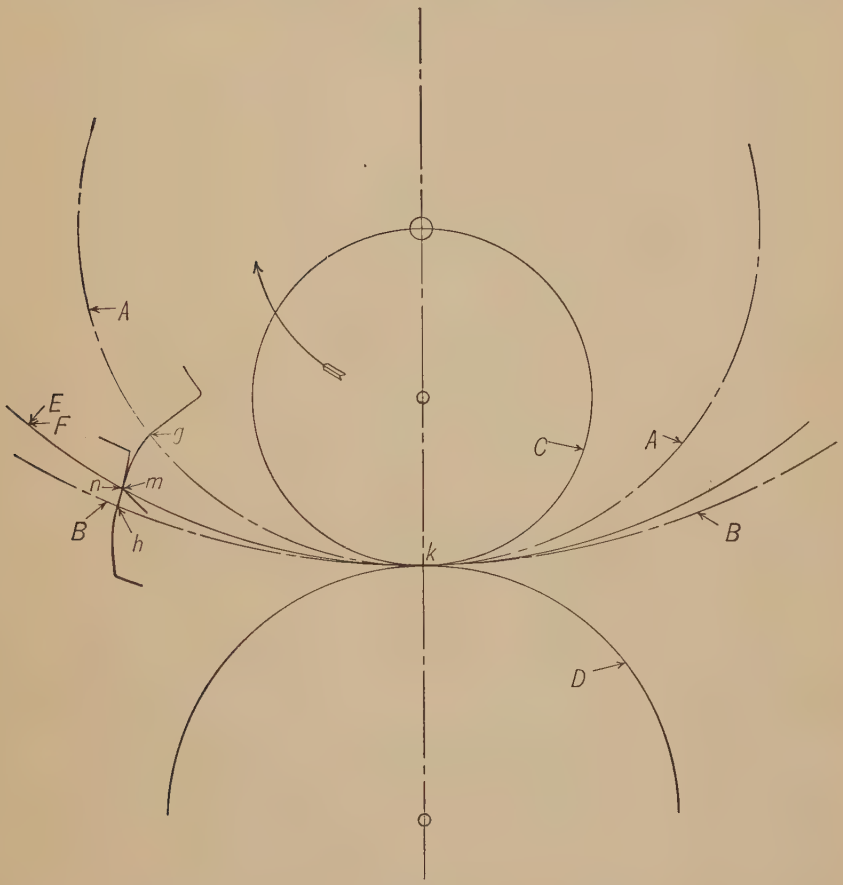

Fig. 157

occurs, and it is evident, if the arcs *kg*, *km*, *kn*, and *kh* are equal as they must be, if the circles move in rolling contact, that the smaller *D* becomes (and consequently *E*) the greater will be the space between the faces.

This may be stated as follows: *If the intermediate describing circle of the pinion is smaller than that of the annular, the faces do not touch, and the action is in all respects similar to the cases of external wheels.*

In Fig. 159 the exterior describing circle D is made larger than it is in Fig. 157, so that the intermediate E of the pinion is larger than F, that of the annular. Making the circle D larger would give the face of

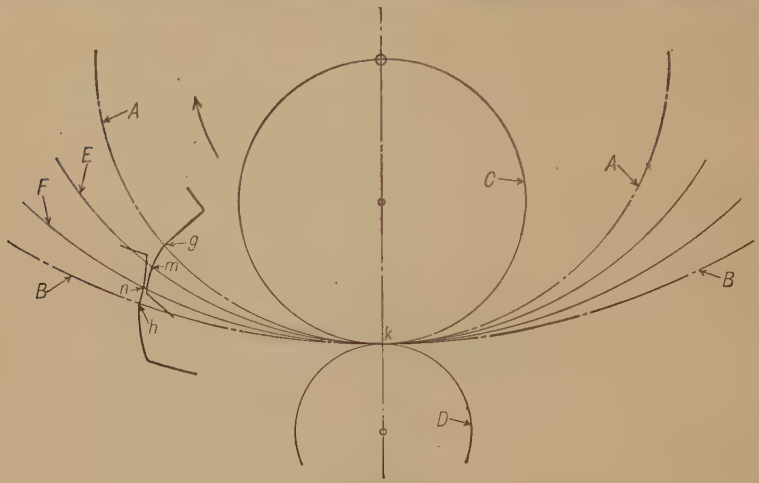

FIG. 158

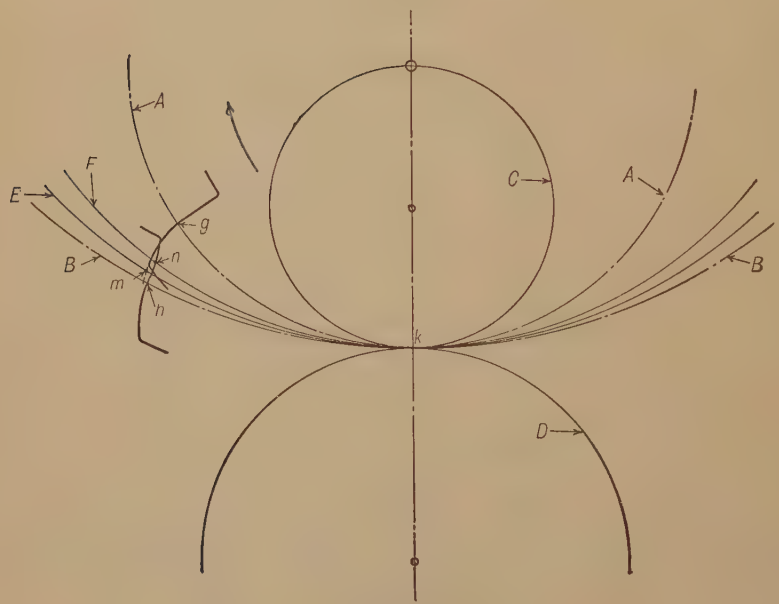

FIG. 159

the pinion less curvature, which would cause the curve gm to cross the curve hn, giving an impossible case. Therefore, *if the intermediate of the pinion is greater than that of the annular, the action is impossible.*

144. Low-numbered Pinions, Cycloidal System. The obliquity of action in cycloidal gears is constantly varying; it diminishes during the approach, becoming zero at the pitch point, and then increases during the recess. For wheels doing heavy work it has been found by experience that the maximum obliquity should not in general exceed 30°, giving a mean of 15°. When more than one pair of teeth are in contact, a high maximum is less objectionable.

As the number of teeth in a wheel decreases, they necessarily become longer to secure the proper path of contact, and both the obliquity of

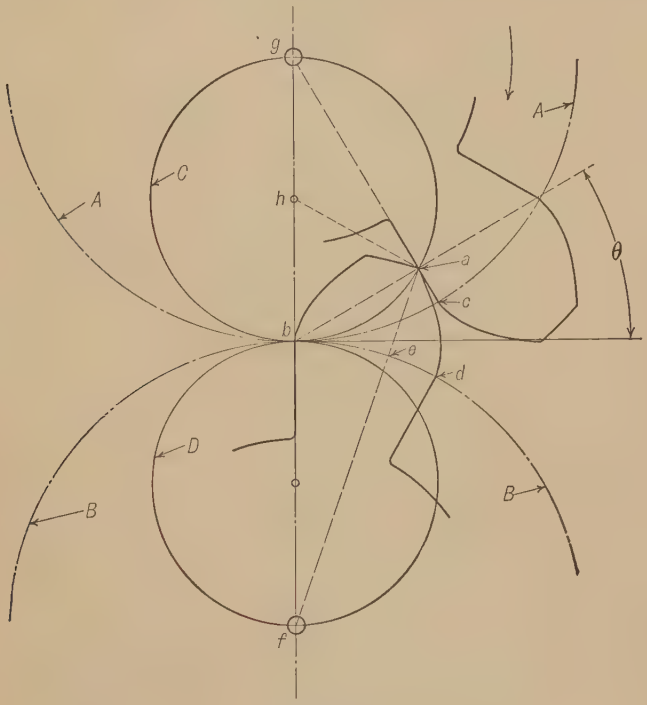

FIG. 160

action and the sliding increase. From the preceding considerations the practical rule is deduced that, for millwork and general machinery, no pinion of less than twelve teeth should be used if it is possible to avoid it.

It often becomes necessary, however, to use wheels having less than twelve teeth, in light-running mechanism, such as clockwork. In such cases a greater obliquity may be admissible, and for light work the flank-describing circle may be made large.

Let it be required to determine the possibility of using two equal pinions, having six teeth, with radial flanks, the arcs of approach and

recess each equal to one-half the pitch, and to find the maximum angle of obliquity. Fig. 160 is the diagram for two such gears. The path of contact is to begin at a, the arcs ab, cb, and db each being equal to one-half the pitch; then the face of the pinion B must be long enough to be in contact with the flank of A at a. Drawing the line aef from a to the center of B, the distance de will be found to be less than one-half the thickness of the tooth. Therefore the approach is possible. Since the pinions are alike, the recess is also possible. The maximum angle of

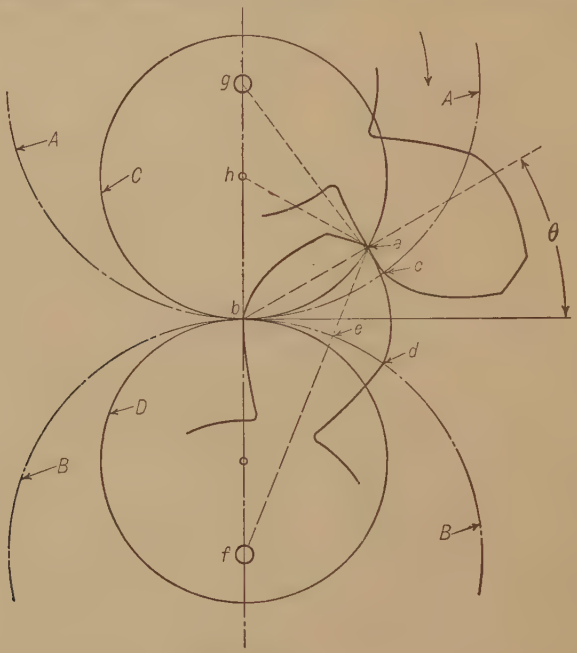

FIG. 161

obliquity in approach is the angle θ, and this may be found in degrees as follows. The arc bc on the pitch circle A subtends an angle bgc equal to one-half the pitch angle, the arc of approach being equal to one-half the pitch; in this case the angle bgc is 30°. The arc ab on the describing circle C is equal to bc and therefore subtends an angle bha, which is to the angle bgc inversely as the radii of the respective circles. In this case these radii are as 2 to 1, making the angle bha equal to 60°. (It is important to notice that the line gc does not pass through the point a excepting in the single case of a radial flank gear.) The angle θ between the tangent and the chord ab will always be one-half the angle ahb subtended by the arc ab. This gives the angle of obliquity 30°. Therefore we find that two pinions with six teeth and radial flanks will work with

arcs of approach and recess each equal to one-half the pitch and with the maximum angle of obliquity of 30°. By allowing a greater angle of obliquity the teeth may be made a little longer and so give an arc of action greater than the pitch, which should be the case in practice.

Two pinions with five teeth each will work with describing circles having diameters three-fifths the diameter of the pitch circles, and arcs of approach and recess each equal to one-half the pitch, as shown by

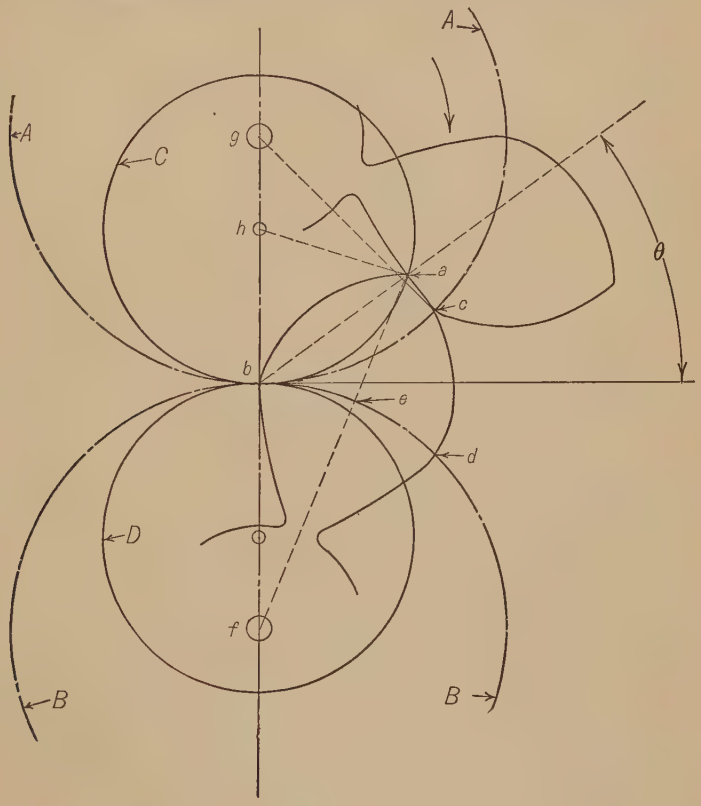

Fig. 162

Fig. 161, the path of contact beginning at *a*, the arcs *ab*, *cb*, and *db* each being equal to one-half the pitch. The action is possible, since *de* is less than one-half the thickness of the tooth. The maximum angle of obliquity is 30°, the angle *bgc* being 36° and *bha* being $\frac{5}{3}$ of 36°, or 60°.

Two pinions with four teeth each will just barely work with describing circles having diameters five-eighths the diameter of the pitch circle, and with no backlash, the arcs of approach and recess each being one-half the pitch. Fig. 162 shows the diagram for this case, and the teeth

are apparently pointed, which would be the case if *de* were just one-half the thickness of the tooth. To determine the possibility of the action the angle *dfe* may be calculated. It should not be greater than $22\frac{1}{2}°$ to allow the desired arc of approach. It will be found to be 22° 27′ 19″, so that the action is just possible. The maximum angle of obliquity θ will be found to be 36°.

A pinion with four teeth will work with a pinion having four teeth or any higher number, if the arc of action is not required to be greater than the pitch, the maximum angle of obliquity not exceeding 36°.

The requirements may be very different from the above in every respect; an arc of action greater than the pitch would usually be required; it might be desired to have the arc of recess greater than the arc of approach; it might not be admissible to have so great an angle of obliquity or to have the teeth cut under so far as a describing circle five-eighths the pitch circle would require. The results would of course vary with the conditions imposed.

145. Stepped Wheels. If a pair of spur wheels are cut transversely into a number of plates, and each plate is rotated through an angle, equal to the pitch angle divided by the number of plates, ahead of the adjacent plate, as shown in Fig. 163, the result will be a pair of *stepped wheels*. This device has the effect of increasing the number of teeth without diminishing their strength; and the number of contact points is also increased. The upper figure shows a section on the pitch line *AA*. The action for each pair of plates is the same as that for spur wheels having the same outlines. In practice there is a limit to the reduction in the thickness of the plates, depending on the material of the teeth and the pressure to be transmitted, since too thin plates would abrade. The number of divisions is not often taken more than two or three, and the teeth are thus quite broad. These wheels give a very smooth and quiet action.

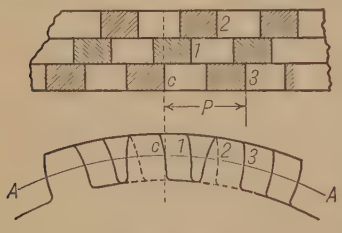

Fig. 163

146. Twisted Spur Gears. If, instead of cutting the gear into a few plates, as shown in Fig. 163, the number of sections is infinite, the result is a helical gear such as that shown in Fig. 116.

The twisting being uniform, the elements of the teeth become helices, all having the same lead, see §§ 161 and 162. The line of contact between two teeth will have a helical form, but will not be a true helix; the projection of this helix on a plane perpendicular to the axis will be the ordinary path of contact. It can easily be seen that the common normal at any point of contact can in no case lie in the plane of rota-

tion, but will make an angle with it. The line of action then can in general have three components: 1° A component producing rotation, perpendicular to the plane of the axes; 2° A component of side pressure, parallel to the line of centers; 3° A component of end pressure parallel to the axes. The end pressure may be neutralized as explained in § 147.

147. Herring-bone Gears. A gear like that shown in Fig. 117, known as a herring-bone gear, is equivalent to two helical gears, one having a right-hand helix and the other a left-hand helix. The use of a pair of gears of this type eliminates the end thrust on the shaft referred to in the preceding paragraph.

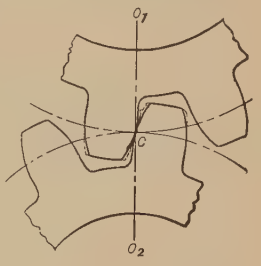

FIG. 164

148. Sliding Friction Eliminated. In Fig. 164, which represents a transverse section of a pair of twisted wheels, suppose the original tooth outlines to have been those shown dotted. Then cut away the faces as shown by full lines having the new faces tangent to the old ones at the pitch point c; proper contact is lost except that at c for the section shown, but by twisting the wheels this contact can be made to travel along the common element of the pitch cylinders through c from one side of the wheel to the other. A simple construction to use in this case is to make the flanks of the wheels radial and the faces semicircles tangent to the flanks. The action here is purely rolling and is very smooth and noiseless; but for heavy work it is best to use the common forms of teeth with sliding action, so that the pressure may be distributed over a line instead of acting at a point.

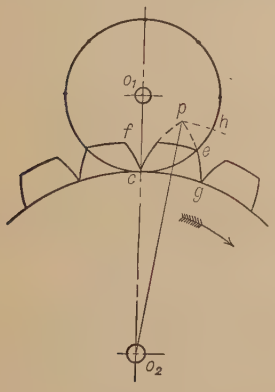

FIG. 165

149. Pin Gearing. In this form of gearing the teeth of one wheel consist of cylindrical pins, and those of the other of surfaces parallel to cycloidal surfaces, from which they are derived.

In Fig. 165 let o_1 and o_2 be the centers of the pitch circles whose circumferences are divided into equal parts, as ce and cg. Now if we suppose the wheels to turn on their axes, and to be in rolling contact at c, the point e of the wheel o_1 will trace the epicycloid gp on the plane of the wheel o_2, and merely a point e upon the plane of o_1. Let cf be a curve similar to ge and imagine a pin of no sensible diameter — a rigid material line — to be fixed at c in the

upper wheel. Then, if the lower one turn to the right, it will drive the pin before it with a constant velocity ratio, the action ending at e if the driving curve be terminated at f as shown.

If the pins be made of a sensible diameter, the outlines of the teeth upon the other wheel are curves parallel to the original epicycloids, as shown in Fig. 166. The diameter of the pins is usually made about equal to the thickness of the tooth, the radius being, therefore, about $\frac{1}{4}$ the pitch arc. This rule is, however, not imperative, as the pins are often made considerably smaller.

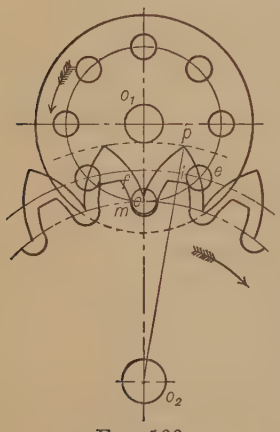

Fig. 166

Clearance for the pin is provided by forming the root of the tooth with a semicircle of a radius equal to that of the pin, the center being inside of the pitch circle an amount equal to the clearance required.

The pins are ordinarily supported at each end, two discs being fixed upon the shaft for the purpose, thus making what is called a *lantern* wheel or pinion.

In wheel work of this kind the action is almost wholly confined to one side of the line of centers. In the elementary form (Fig. 165) the action is wholly on one side, and receding, since it cannot begin until the pin reaches c (if o_2 drives), and ceases at e; if o_1 is considered the driver, action begins at e, ends at c, and is wholly approaching. As approaching action is injurious, pin gearing is not adapted for use where the same wheel has both to drive and to follow; the pins are therefore always given to the follower, and the teeth to the driver.

When the pin has a sensible diameter, the tooth is shortened and its thickness is decreased; the line of action is also shortened at e, Fig. 166, and, instead of beginning at c, will begin at a point where the normal to the original tooth curve, through the center of the pin, first comes in contact with the derived curve mf. This normal's end will not fall at c, but at a point on the arc ce beyond, on account of a property of the curve parallel to an epicycloid. The parallel to the epicycloid is shown in Fig. 167, cp being the given epicycloid. The curve may be found by drawing a series of arcs ss with a radius equal to the normal distance between the curves, and with the centers on cp. The parallel curve first passes below the pitch curve cm and then rises, after forming a cusp,

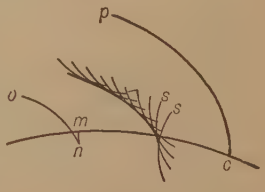

Fig. 167

and cuts away the first part drawn: this is more clearly shown somewhat exaggerated at *mno*. Hence the part which would act on the pin when its center is at *c* is cut away, and, for the same epicycloid, the greater the diameter of the pin the more this cutting away. In Fig. 166 the pin *e* is just quitting contact with the tooth at *i* while *c* is at the pitch point, and, according to the above property of the parallel to the epicycloid, is not yet in contact with the tooth *m*. Strictly speaking, then, the case shown is not a desirable one, as the tooth should not cease contact at *i* until *m* begins its action. The above error is practically so small that it has been disregarded, especially for rough work.

The following method may be used in determining a limiting case in pin gearing:

If the pitch arc = *cg* is assumed (Fig. 168), the greatest possible height of tooth is determined by the intersection of the front and back of the tooth at *p*; and if this height is taken, action will begin at *c* and end at *h*, the point in the upper pitch circle through which *p* passes. Now if *p* falls upon the pitch circle *ceh*, we should have a limiting case for a pin of no sensible diameter. If the pin has a sensible diameter and the pitch arc *cg* = *ce* is assigned, bisect *cg* with the line o_2p and draw *ce* intersecting o_2p in *k*; assume a radius for the pin less than *ek* and draw the derived curve to cut o_2p in *j*, which will be the point of the tooth. Through *j* draw a normal to the epicycloid, cutting it at *s*; through *s* describe an arc about o_2 cutting the upper pitch circle at *t*, the position of the center of the pin at the end of its action. Draw the outline *mf* of the next working tooth, find the point *m* at the cusp of the curve parallel to the epicycloid, and draw the normal *mn*; *m* is the lowest possible working point of the tooth. Through *n* describe an arc about o_2 cutting the original path of contact in *r*, which is the point that *n* must reach before the tooth will be in contact with the pin, or is the point that *n* must reach before the common normal to the pin and tooth curve passes through the pitch point.

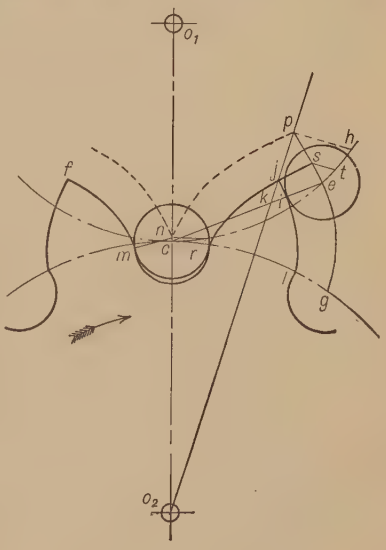

FIG. 168

Now action begins when the axis of the pin is at r and ends at t; if $rt = ce$, we have an exact limiting case and the assumed radius of the pin is a maximum; if $rt < ce$, the radius is too great; but if $rt > ce$, the case is practical To get the exact limit a process of trial and error should be resorted to. When the pin is a point the methods used in cycloidal gearing may be applied; the correction for a pin of sensible diameter can then be made by applying the method of Fig. 168.

150. Pin Gearing: Wheel and Rack. As the pins are always given to the follower, two cases arise.

1° *Rack drives*, giving the pin-wheel and rack, Fig. 169. Here the original tooth is bounded by cycloids generated by the pitch circle of the wheel.

2° *Wheel drives*, giving the pin-rack and wheel. Here (Fig. 170) the original tooth outline is the involute of the wheel's pitch circle.

151. Inside Pin Gearing. Here also there are two cases.

1° *Pinion drives* (Fig. 171). The original tooth outlines will be internal epicycloids generated by rolling the pitch circle of the annular wheel on the pinion's pitch circle.

2° *Annular wheel drives* (Fig. 172). Here the original tooth outline is the hypocycloid traced by rolling the pinion's pitch circle in the wheel's circle.

Path of Contact. In the elementary form of tooth (Fig. 165) the path of contact is on the circumference of the pitch circle of the follower o_1, as ce. When a pin is used its center always lies in this circumference, and its point of contact may be found by laying off a distance ei equal to the radius of the pin (Fig. 173) on the common normal. Drawing a number of these common normals, all of which must pass through the pitch point c, and laying off the radius of the pin ei on each, we have the path of contact ci known as the *limaçon*.

152. Double-point Gearing. This form of gearing, shown in Fig. 174, gives very smooth action where not much force is to be transmitted. The pitch circles are here taken as the describing circles; the face cg of the pinion o_1 is generated by rolling the pitch circle o_2 on that of o_1, and the face cf is generated by rolling the pitch circle o_1 on o_2. If o_1 is considered the driver, action begins at d, the point c of o_1 sliding down the face cf while c travels from d to c. In the receding action the point c of the tooth of o_2 is acted on by the face cg while c moves from c to e. The spaces must be so made as to clear the teeth. This combination reduces friction to a minimum and gives the obliquity of action less than in any case except pin gearing, but the teeth are much undercut and weakened by the clearing curves, and if much force is to be transmitted the line of contact will soon be worn away.

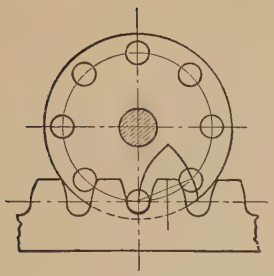

FIG. 169

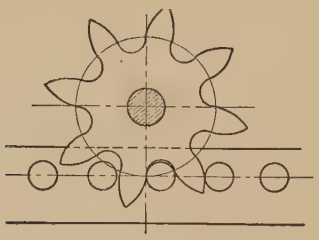

FIG. 170

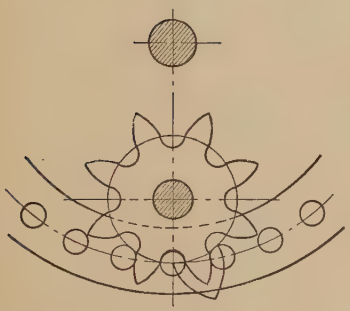

FIG. 171

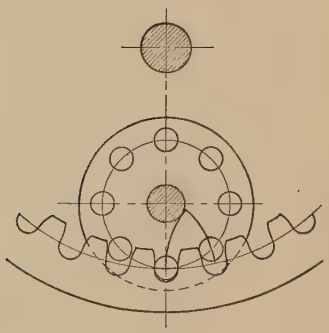

FIG. 172

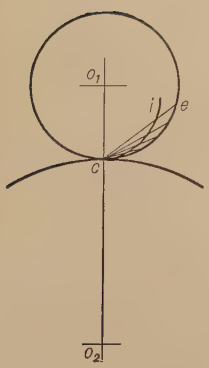

FIG. 173

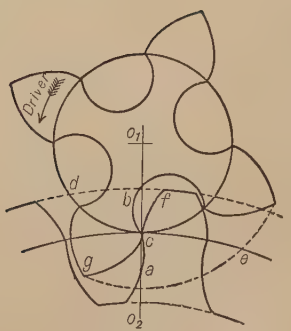

FIG. 174

153. Bevel Gears. A pair of bevel gears bears the same relation to a pair of rolling cones that a pair of spur gears bears to rolling cylinders.

Fig. 175 shows two bevel gears meshing together, the contact in this case being internal. Here, as in the case of spur gears, the angular speeds are inversely proportional to the number of teeth.

The pitch circle of a bevel gear is the base of the cone which the gear replaces.

154. To Draw the Blanks for a Pair of Bevel Gears. A convenient way to gain an understanding of the principle of bevel gear design will be to study the method of drawing the blanks from which a pair of bevel gears is to be cut. Let it be assumed that a 6-pitch, 12-tooth gear is to mesh with an 18-tooth gear, the axes to intersect at 90°. Start with the point O, Fig. 176, as the point of intersection of the two axes. Draw OS and OS_1 making the required angle (in this case 90°). These are the center lines of the shafts. Assume that the 12-tooth gear is to be on S_1. Call this gear A and the 18-tooth gear B. Since A has 12 teeth and is 6-pitch, its pitch diameter, that is, the diameter of the base of its pitch cone, is $12 \div 6$ or 2 in. In like manner the pitch diameter of B is $18 \div 6$ or 3 in. From O measure along OS_1 a distance OM equal to the pitch radius of B ($1\frac{1}{2}$ in.) and, through M, thus found, draw a line perpendicular to OS_1. In like manner make ON equal to the pitch radius of A and draw a line through N perpendicular to OS. These lines intersect at K. Make MR equal to MK and NT equal to NK. From R, K, and T draw lines to O. Then the triangle ORK is the projection of the "pitch cone" of the gear A and OTK that of the "pitch cone" of B. It will be noticed that the above construction is the equivalent of that for rolling cones. Next, draw through

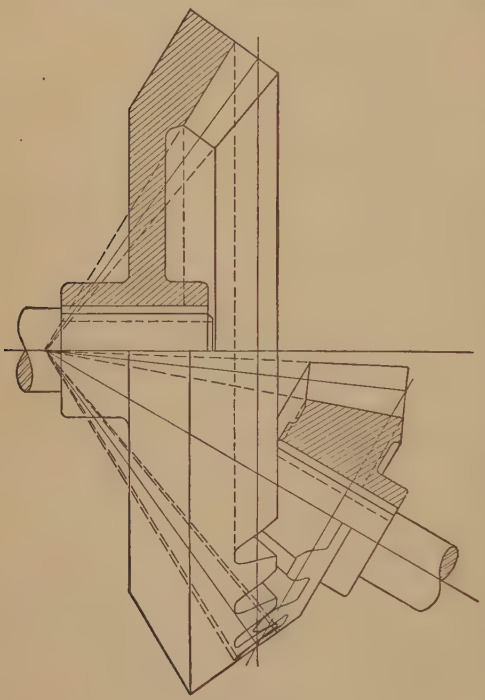

Fig. 175

K a line perpendicular to OK meeting OS_1 at P and OS at H (not shown). Draw a line from H through T and from P through R. The cone represented by the triangle THK is called the *normal cone* of the gear B and that represented by the triangle RPK is called the normal cone of A. These cones will be explained more in detail later.

From R lay off Ra equal to the addendum that is to be used on gear A (this is determined by the same considerations that would be used

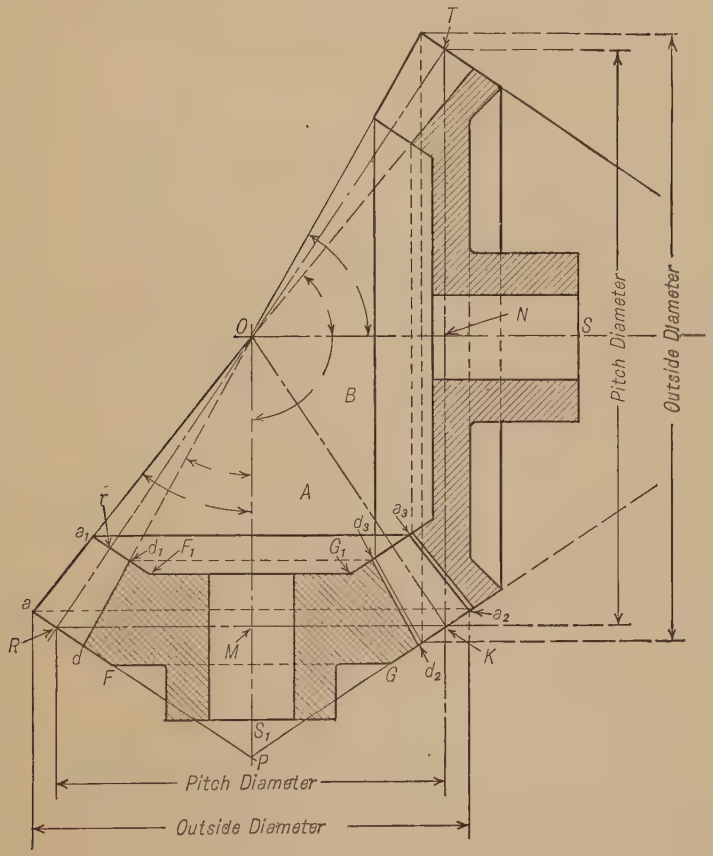

FIG. 176

for the addendum on a spur gear). Along RO lay off Rr equal to the desired length of gear face (§ 113). Through r draw a line parallel to PR. From a draw a line to O meeting this parallel at a_1. Through a draw a line parallel to RK meeting PKH at a_2. From a_1 draw a line parallel to RK meeting a line drawn from a_2 to O at a_3. Lay off along RP the distance Rd equal to the dedendum and draw from d toward O meeting a_1r at d_1. Find d_2 and d_3 in the same way that a_2 and a_3 were

found. The figure add_1a_1 represents the tooth. The dimensions of the hub and the position of lines FG and F_1G_1 and of the corresponding lines on the other gear may be made anything that is desirable.

It will appear from this construction that bevel gears must be laid out in pairs.

155. Teeth for Bevel Gears. The gear blanks, as laid out in § 154, are of the form ordinarily used, and the information there given is perhaps all that a person making use of bevel gears would need. In order to understand the principles underlying the action of the gears it may be desirable to notice the relation between bevel gear teeth and spur gear teeth.

In the discussion on the teeth of spur wheels, the motions were considered as taking place in the plane of the paper, and lines instead of surfaces have been dealt with. But the pitch and describing curves, and also the tooth outlines, are but traces of surfaces acting in straight-line contact, and having their elements perpendicular to the plane of the paper. In bevel gearing the pitch surfaces are cones, and the teeth are in contact along straight lines, but these lines are perpendicular to a spherical surface, and all of them pass through the center of the sphere, which is at the point of intersection of the axes of the two pitch cones.

In Fig. 177, O is the center of the sphere, AOC and BOC are the pitch cones. If the teeth are involute, cones such as MON and KOL are the base cones, and the teeth may be thought of as being generated by a plane rolling on each of the base cones, the ends of the teeth lying on the surface of the sphere, and the tooth outlines being the curves traced on this surface by the plane which generates the teeth.

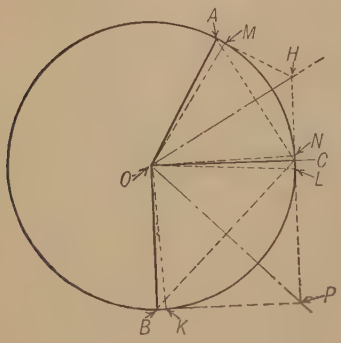

FIG. 177

156. Drawing the Teeth on Bevel Gears. Tredgold's Approximation. Since narrow zones of the sphere, Fig. 177, near the circles BC and AC, will nearly coincide with cones whose elements are tangent at B, C and M, the conical surfaces may be substituted for the spherical ones without serious error, and as the tooth outlines are always comparatively short they may be supposed to lie on the cones. These cones BPC and AHC are called the normal cones and correspond to the cones RPK and THK of Fig. 176. Fig. 178 shows the method of drawing the tooth outlines. It will be noticed that the developments of portions of the normal cones are

treated as if they were pitch circles of spur gears and the teeth are drawn on the development exactly as if they were teeth of spur gears, and are then transferred to the other views by ordinary principles of projection.

157. Crown Gears. When the angle at the apex of the cone of one of a pair of bevel gears is 180° the pitch cone becomes a flat disk and the normal cone becomes a cylinder. Such a gear is analagous to a rack bent in the form of a circle. The teeth taper inward, elements of

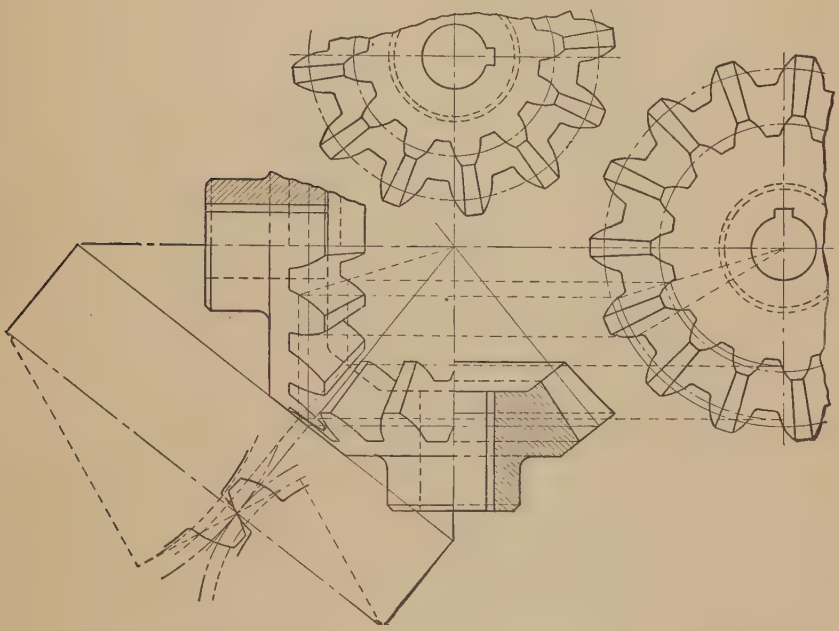

Fig. 178

the teeth converging toward the center of the disk. Another bevel of any number of teeth may be designed to run with a crown gear but the angle between the axes will depend upon the ratio of the teeth. Fig. 179 shows such a pair of gears.

158. Twisted Bevel Gears. The teeth of bevel gears may be twisted in the same manner as the teeth of spur gears (see § 146). Fig. 122 shows a pair of twisted bevels such as used for the drive to the differential of an automobile. The gears from which the drawing was made were from a Pierce Arrow touring car.

159. Skew Bevels. Fig. 123 shows a pair of skew bevel gears used in cotton machinery. Here the shafts are at right angles, non-inter-

secting, but passing so near each other that ordinary helical gears cannot be used.

The pitch surfaces of these gears are hyperboloids of revolution, and the teeth are in contact along straight lines. The angular speeds are inversely as the pitch diameters.

160. Screw Gearing. This class of gearing is used to connect non-parallel and non-intersecting shafts and includes the two types known as worm and wheel and helical gears. The latter when used for this purpose are often, but inaccurately, called spiral gears. In the helical gears and the elementary forms of worm and wheel the teeth have point contact. The speed ratio is not necessarily in the inverse ratio of the diameters. The action of gears of this class is similar to the action of a screw and nut which will be considered in a later chapter. This is particularly evident in the case of the worm and wheel. The distinction between the worm and wheel and the helical gears, however, is not a very clear one, being largely a matter of speed ratio and manner of forming the teeth. Both may properly be considered here as helical gears and the following discussion will apply to both The worm and wheel will be considered in Chapter VIII as a screw and nut.

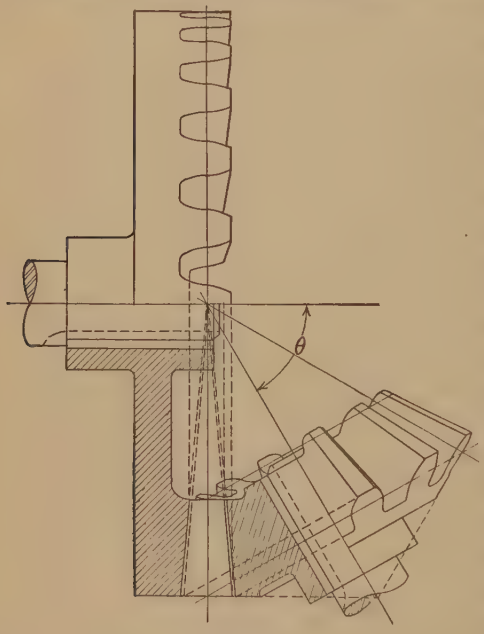

FIG. 179

161. The Helix; Its Construction and Properties. A helix is a curve wound around the outside of a cylinder or cone advancing uniformly along the axis as it winds around. The nature of the curve and the method of drawing it may be understood from a study of Fig. 180.

The *angle of a helix* is the angle which a straight line tangent to the helix at any point makes with an element of the cylinder. This angle is the same for all points on a cylindrical helix. Two helices are said to be normal to each other when their tangents drawn at the point where the helices intersect are perpendicular to each other.

When two parallel lines wind around a cylinder forming parallel helices, as in Fig. 181, the result would be called a double helix; three lines would give a triple helix, and so on. If the helix slopes as in Fig.

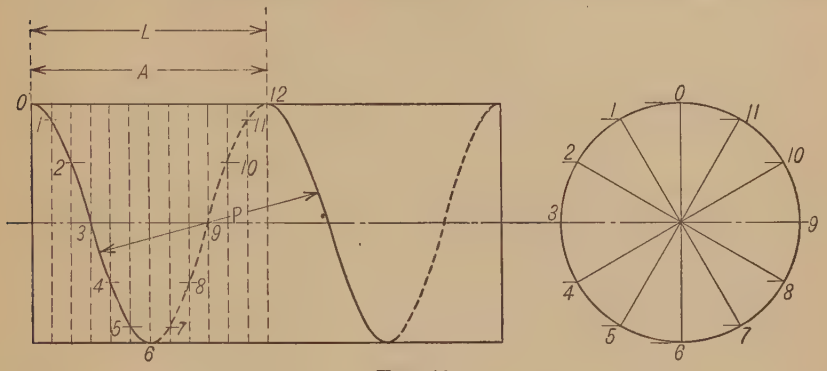

FIG. 180

180 it is called a right-hand helix; if it slopes in the reverse direction it is called a left-hand helix.

162. Lead. Axial Pitch. The distance L, Figs. 180 and 181, by which a helix advances along the axis of the cylinder for one turn around is called the **lead.** The distance A, *measured parallel to the axis*, from one point on a helix to the corresponding point on the next turn of a single helix, or to the corresponding point on the next helix in the case of a multiple helix, is called the **axial pitch.** In the case of a single helix this is equal to the lead; in the case of a double helix the axial pitch is equal to one-half the lead; in a triple helix, one-third of the lead, and so on.

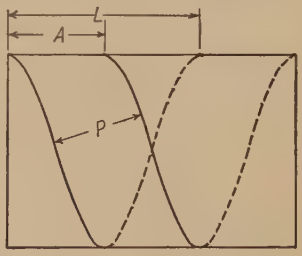

FIG. 181

163. Normal Pitch. The distance P, between a point on a helix to the corresponding point on the next turn of a single helix or the corresponding point on the next helix in the case of a multiple helix, *measured along the normal to the helix,* is called the **normal pitch.**

164. Helical Gears are gears whose teeth wind partially around the pitch cylinders. A pair of such gears may be used to connect parallel shafts, as shown in Fig. 116, or non-parallel shafts, which is the case now under discussion. The method of forming the teeth and the action of the teeth differ in the two cases.* The definitions given

* The twisted gears (Fig. 116) have line contact between teeth while the helical gears in general have point contact, or multiple point contact.

above apply to the teeth of helical gears. In order that two helical gears may work together they must have the same normal pitch and the angle between the shafts must be such that the tangent to the pitch helices of the two gears coincide at the pitch point. From this it follows

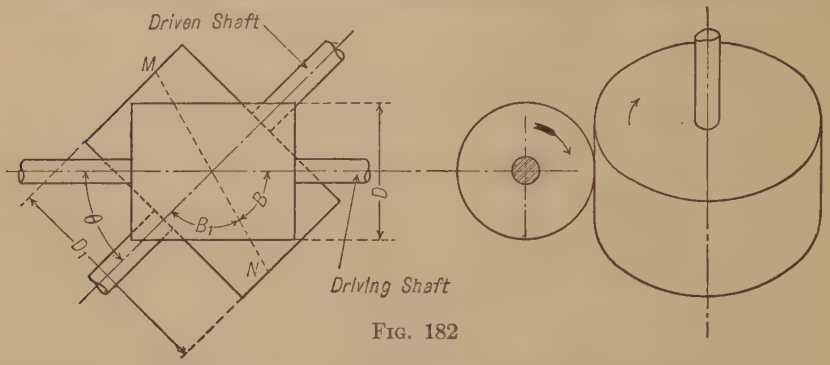

FIG. 182

that the sum of the angles of their helices must be equal to the angle between the shafts, or the supplement of this angle.

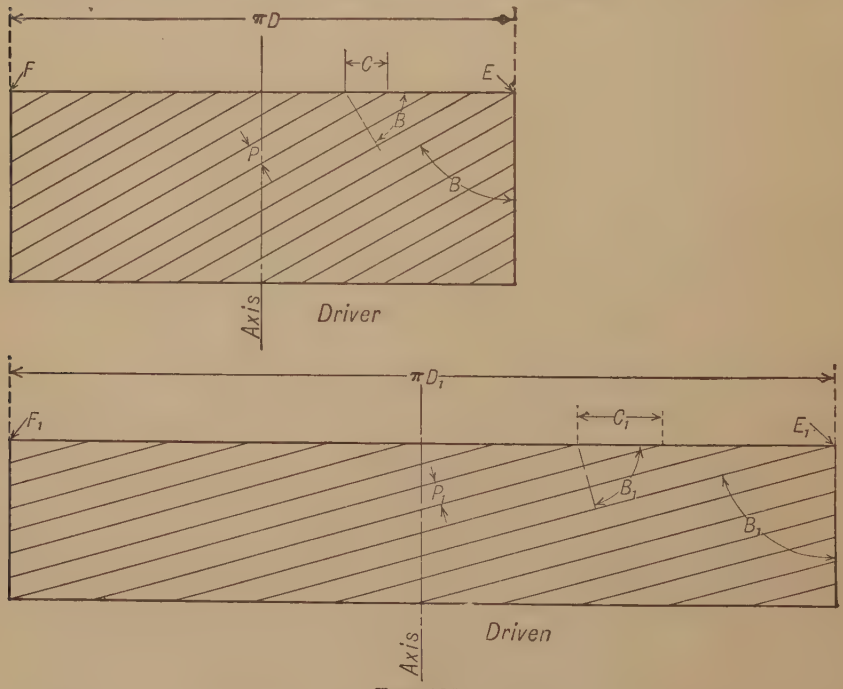

FIG. 183

Fig. 182 shows the pitch cylinders of a pair of helical gears. The line *MN* is the common tangent to the teeth at the point of contact of

the pitch cylinders (that is, the pitch point). B is therefore the angle of the helix of the driver and B_1 the angle of the helix of the driven gear. Here the angle θ between the two shafts is equal to $180° - (B + B_1)$.

Fig. 183 is the development of the surfaces of the two pitch cylinders shown in Fig. 182, the slanting lines being the development of imaginary helices at the centers of the teeth on the pitch cylinders. The perpendicular distance between these lines is the normal pitch P (the same in both gears). The distance C and C_1 between the points of intersection of two adjacent teeth with the ends of the cylinder (EF and E_1F_1) are the circular pitches of the respective gears. It will be noticed that the circular pitches of the two gears are not alike but depend upon the helix angles.

It should be noticed that if the relation between the angles θ and B is such that B_1 becomes 0 the driven gear becomes like an ordinary spur gear. Hence a properly formed worm may be made to drive a spur gear if their axes are set at the proper angle with each other.

165. Relation between the Circular Pitches of a Pair of Helical Gears. Referring still to Fig. 183

$$C = \frac{P}{\cos B} \text{ and } C_1 = \frac{P}{\cos B_1}.$$

Therefore,
$$\frac{C_1}{C} = \frac{\cos B}{\cos B_1}. \tag{52}$$

166. Relation between Numbers of Teeth in a Pair of Helical Gears. Let T represent the number of teeth in the driver (Fig. 183) and T_1 the number of teeth in the driven gear.

Then
$$T = \frac{\pi D}{C} \text{ and } T_1 = \frac{\pi D_1}{C_1}.$$

Therefore
$$\frac{T_1}{T} = \frac{\frac{\pi D_1}{C_1}}{\frac{\pi D}{C}} = \frac{D_1 C}{D C_1}.$$

But from equation (52) $\dfrac{C}{C_1} = \dfrac{\cos B_1}{\cos B}$.

Therefore
$$\frac{T_1}{T} = \frac{D_1 \cos B_1}{D \cos B}. \tag{53}$$

That is, *the numbers of teeth are directly as the product of the pitch diameters multiplied by the cosines of the helix angles.*

167. Speed Ratio of Helical Gears. As in the case of spur gears, the angular speeds of a pair of helical gears are inversely as the numbers of teeth. If N represents the angular speed of the driver, and N_1 of the driven gear, it follows from equation (53) that

$$\frac{N_1}{N} = \frac{D \cos B}{D_1 \cos B_1}. \tag{54}$$

CHAPTER VI

WHEELS IN TRAINS

168. Train of Wheels. A train of wheels is a series of rolling cylinders or cones, gears, pulleys or other similar devices serving to transmit power from one shaft to another.

The examples of rolling cylinders, gears, etc., which have been discussed in earlier chapters are really wheel trains each involving only one pair of wheels. In Fig. 184 D is a gear fast to shaft A. E is a gear fast to shaft B and meshing with D. F is another gear also fast to shaft B and meshing with the gear G which is fast to shaft C. If now the shaft A begins to turn, D will turn with it, and, therefore, cause E to turn. Since E is fast to the shaft B the latter will turn with E. Gear F will then turn at the same angular speed as E and will cause G to turn, causing the shaft C to turn with it. That is, D drives E, and F, turning with E, drives G.

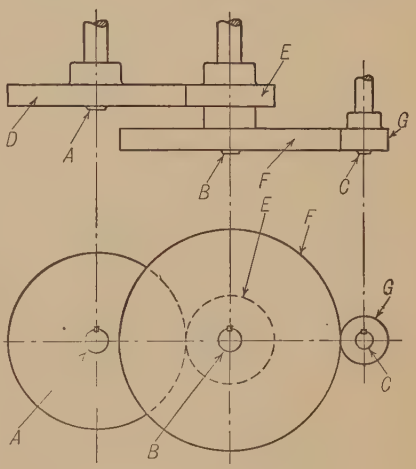

Fig. 184

The above is an example of a simple train of gears consisting of two pairs. Fig. 185 shows an arrangement of pulleys similar in action to the gears shown in Fig. 184. H is a pulley on the shaft R belted to the pulley J on shaft S. On the same shaft is another pulley K belted to the pulley L on shaft T.

Fig. 186 shows a train of wheels involving both gears and pulleys. In this case D is a gear on shaft A, meshing with and driving the gear E on shaft B. On the same shaft is pulley K, belted to the pulley L on shaft C.

169. Driving Wheel and Driven Wheel. Referring again to Fig. 184, the gear D by its rotation causes E to turn; therefore, D may be called the *driver* or *driving wheel*, and E the *driven wheel*. Similarly F, turning with E, is the driver for the wheel G. Hence, in any train such

as here shown, consisting of three axes with two pairs of wheels, two of the wheels are drivers and two are driven wheels.

170. Idle Wheel. In Fig. 187, gear D drives E, which in turn drives F. E is, therefore, both a driven and a driving wheel. Such a wheel is called an *idle wheel.*

171. Train Value (Speed Ratio). The ratio of the angular speed of the last wheel of a train to the angular speed of the first wheel of the

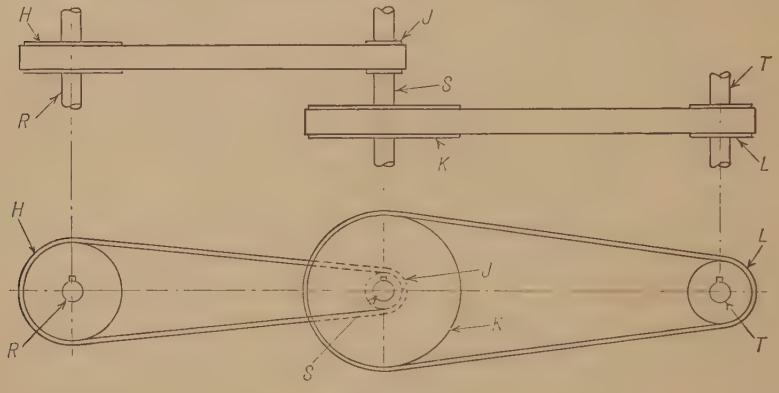

Fig. 185

same train is called the *value of the train,* or *train value,* and will be represented by e. For example, if the shaft A in Fig. 184 makes 25 *r.p.m.*, and the sizes of the several gears are such that shaft C makes 150 *r.p.m.*,

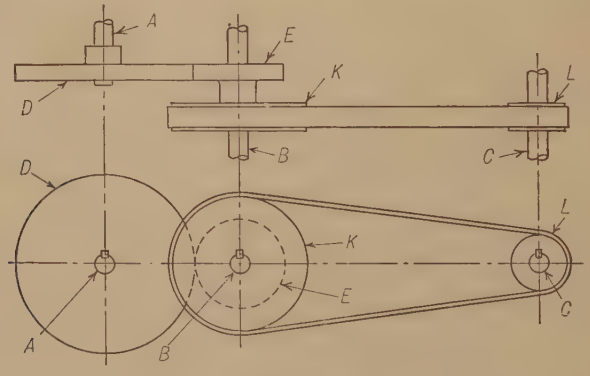

Fig. 186

the value of the train would be $\frac{150}{25} = 6 = e$. An inspection of the same figure will show that if A turns right handed, B will turn left handed and C will turn right handed. The direction, then, of C is the same as that of A. The value of this train is then said to be positive,

and will be indicated by putting a + sign in front of the number which indicates its value. If the number of wheels involved is such that the last shaft turns in the opposite direction from the first shaft, the value of the train will be said to be negative, which fact will be indicated by a − sign in front of the number indicating the train value.

172. Calculation of Speeds. Let it be assumed that the gears in Fig. 184 have teeth as follows:

D, 100 teeth	*F*, 125 teeth
E, 50 teeth	*G*, 25 teeth

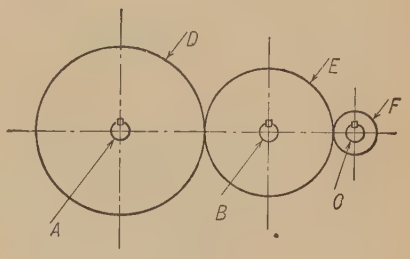

FIG. 187

It will also be assumed that shaft *A* makes 25 *r.p.m.* and it is required to find the speed of *C*. Since the speed of *B* is to the speed of *A* as the teeth in *D* are to the teeth in *E*, the revolutions of *B* will be equal to $25 \times \frac{100}{50}$; also, since the speed of *C* is to the speed of *B* as the teeth in *F* are to the teeth in *G*, the speed of $C = 25 \times \frac{100}{50} \times \frac{125}{25} = 250$. Expressing this as a formula,

The speed of the last shaft is equal to the speed of the first shaft

$$\times \frac{\textit{the product of the teeth of all the drivers}}{\textit{the product of the teeth of all the driven wheels}}. \qquad (55)$$

In the case of pulleys in Fig. 185 the principle is the same, except that diameters are used instead of numbers of teeth. Suppose that pulley *H* is 24 ins. in diameter, *J* 8 ins. in diameter, *K* 36 ins. in diameter, and *L* 12 ins. in diameter, then the speed of *T* will be equal to the speed of $R \times \frac{24 \times 36}{8 \times 12}$; that is, in the case of a train of pulleys:

The speed of the last shaft is equal to the speed of the first shaft

$$\times \frac{\textit{the product of the diameters of all the driving pulleys}}{\textit{the product of the diameters of all the driven pulleys}}. \qquad (56)$$

In a train consisting of a combination of gears and pulleys, as in Fig. 186,

The speed of the last shaft is equal to the speed of the first shaft

$$\times \frac{\textit{the product of diameters and numbers of teeth of all the driving wheels}}{\textit{the product of diameters and numbers of teeth of the driven wheels}}. \qquad (57)$$

An idle wheel such as gear *E* in Fig. 187 has no effect on the speed ratio, but does cause a change in the direction. This can be seen from the following calculation: Let the wheel *D* have 100 teeth; *E* 75 teeth,

and F 25 teeth, then the speed of shaft C is equal to the speed of $A \times \frac{100}{75} \times \frac{75}{25}$. 75 then, which is the number of teeth in the idle wheel, appears in both numerator and denominator and cancels out, and therefore the speed of C becomes the speed of $A \times \frac{100}{25}$.

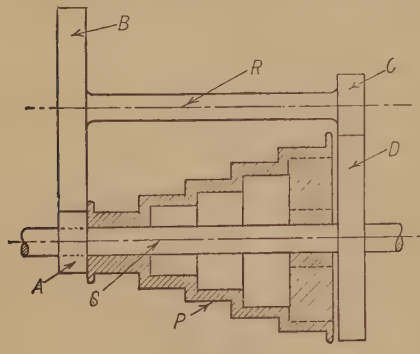

FIG. 188

173. Driving and Driven Gears having Coincident Axes. Fig. 188 is a diagram of the back gear arrangement for a simple cone pulley head-stock on an engine lathe. It illustrates the principles involved when two wheels, whose axes coincide, are connected by a train of wheels through an intermediate shaft, the axis of the intermediate shaft being parallel to the axis of the connected wheels. P is the cone pulley. A is a gear integral with P and meshing with gear B. C is another gear on the same shaft with B, both B and C being fast to the shaft. C meshes with gear D on the spindle S. From Eq. 55.

Speed of spindle = speed of cone pulley

$$\times \frac{\text{Teeth in } A \times \text{Teeth in } C}{\text{Teeth in } B \times \text{Teeth in } D}.$$

Since, however, the shaft R is parallel to S the gears must be so proportioned that the pitch radius of A + pitch radius of B equals pitch radius of C + pitch radius of D. Consequently, if the pitches of the two pairs are to be in some definite ratio there must be a corresponding relation between the sum of the teeth in A and B and the sum of the teeth in C and D.

174. Frequency of Contact between Teeth: Hunting Cog. Given two gears G_1 and G_2 with teeth T_1 and T_2 having the greatest common divisor a.

Then let $\quad T_1 = at_1$ and $T_2 = at_2$.

Therefore, $\quad \dfrac{\text{Turns } G_1}{\text{Turns } G_2} = \dfrac{T_2}{T_1} = \dfrac{at_2}{at_1} = \dfrac{t_2}{t_1}$.

Contact between the same pair of teeth will take place after the passage of a number of teeth equal to the least common multiple of T_1 and $T_2 = at_1t_2$.

Therefore, before the same pair of teeth come in contact again after having been in contact,

$$\text{the turns of } G_1 = \frac{at_1t_2}{at_1} = t_2$$

$$\text{and turns of } G_2 = \frac{at_1t_2}{at_2} = t_1.$$

Therefore the smaller the numbers t_1 and t_2, which express the velocity ratio of the two axes, the more frequently will the same pair of teeth be in contact.

Assume the velocity of ratio of two axes to be nearly as 5 to 2. Now, if $T_1 = 80$ and $T_2 = 32$,

$$\frac{T_1}{T_2} = \frac{80}{32} = \frac{5}{2}, \text{ exactly,}$$

and the same pair of teeth will be in contact after five turns of T_2 or two turns of T_1.

If T_1 is changed to 81, then $\frac{T_1}{T_2} = \frac{81}{32} = \frac{5}{2}$, very nearly, the angular velocity ratio being scarcely distinguishable from what it was originally. But now the same teeth will be in contact only after 81 turns of T_2 or 32 turns of T_1.

The insertion of a tooth in this manner prevents contact between the same pair of teeth too often, and insures greater regularity in the wear of the wheels. The tooth inserted is called a *hunting cog*, because a pair of teeth, after being once in contact, gradually separate and then approach by one tooth in each turn, and thus appear to hunt each other as they go round. In cast gears, which will be more or less imperfect, it would be much better if an imperfection on any tooth could distribute its effect over many teeth rather than that all the wear due to such imperfection should come always upon the same tooth. This result is most completely obtained when the numbers of teeth on the two gears are prime to each other, as above, when T_1 and T_2 were 81 and 32 respectively.

175. Example of Wheels in Trains. The following paragraphs will give a few examples of wheels in trains. These are selected because they serve to illustrate the principles involved, and not because a knowledge of these particular trains is of special importance.

176. Clockwork. A familiar example of the employment of wheels in trains is seen in clockwork. Fig. 189 represents the trains of a common clock; the numbers near the different wheels denote the number of teeth on the wheels near which they are placed.

The verge or anchor O vibrates with the pendulum P, and if the pendulum vibrates once per second, it will let one tooth of the escape-wheel pass for every double vibration, or every two seconds. Thus the shaft A will revolve once per minute, and is suited to carry the second hand S.

The value of the train between the axes A and C is $\frac{\text{turns } C}{\text{turns } A} = \frac{8 \times 8}{60 \times 64} = \frac{1}{60}$, or the shaft C revolves once for sixty revolutions of

A; it is therefore suited to carry the minute hand M. The hour hand H is also placed on this shaft C, but is attached to the loose wheel F by means of a hollow hub. This wheel is connected to the shaft C by means of a train and intermediate shaft E. The value of this train is

$$\frac{\text{turns } H}{\text{turns } M} = \frac{28 \times 8}{42 \times 64} = \frac{1}{12}.$$

The drum D, on which the weight-cord is wound, makes one revolution for every twelve of the minute hand M, and thus revolves twice each day. Then, if the clock is to run eight days, the drum must be large enough for sixteen coils of the cord. The drum is connected to the wheel G by means of a ratchet and click, so that the cord can be wound upon the drum without turning the wheel.

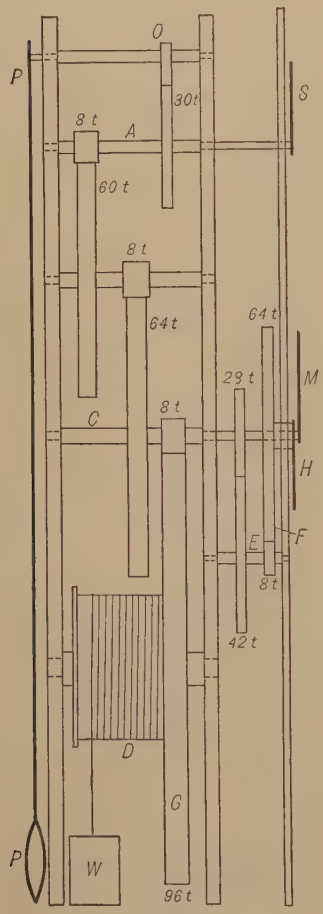

FIG. 189

Clock trains are usually arranged as shown in the figure, the wheels being placed on shafts, often called "arbors," whose bearings are arranged in two parallel plates which are kept the proper distance apart by shouldered pillars (not shown) placed at the corners of the plates. When the arbor E is placed outside, as shown, a separate bearing is provided for its outer end.

177. Planer Drive. Fig. 190 shows a portion of the gear train for driving the platen on a planer. The shaft S is driven by a motor or by a counter-shaft above the machine. S drives S_1 by the pair of gears A and B. On S_1 are two gears E and D which are fast to each other and slide on a long key on the shaft so that they are obliged to turn with the shaft, but may be moved along it by means of a shifting device fitting into the groove V. A similarly arranged pair of sliding gears H and K are on the shaft S_2. Gears B and C are permanently attached to S_1 and F and G to S_2. The shaft S_2 has a pulley on the end (not shown in the diagram) which drives, by a belt, to the mechanism operating the table. The object of the system of gears shown in the diagram is to

enable the operator to obtain four different speeds for S_2, and therefore for the platen, for one speed of S.

With H and K in the position shown and with D and E to the left so that E meshes with F as shown, E is driving F and the train value between S and S_2 is

$$\frac{\text{Teeth } A \times \text{Teeth } E}{\text{Teeth } B \times \text{Teeth } F}.$$

All the other gears are turning idle. If D and E are moved to the right a distance just a little more than the width of the face of E this gear

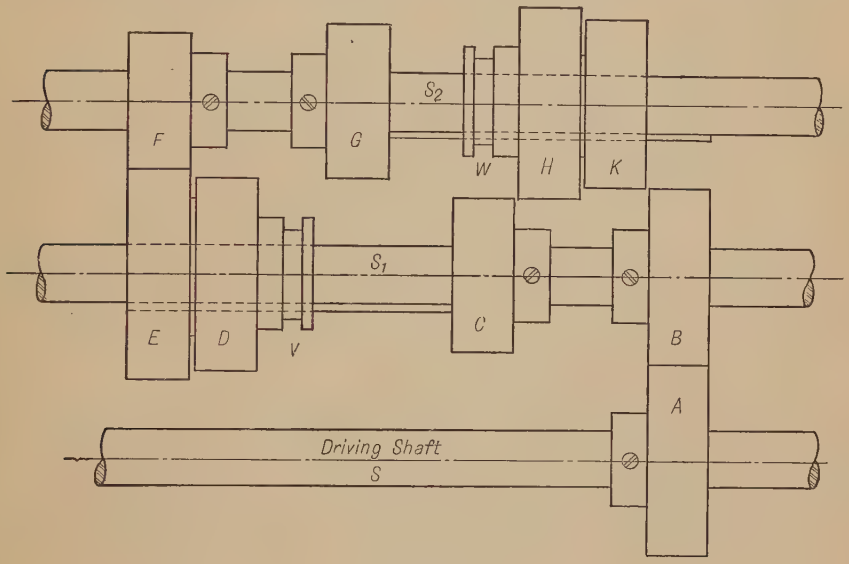

FIG. 190

will be out of mesh with F and the whole system will be in neutral position. If D and E are moved still further to the right D will mesh with G and the train from S to S_2 is $\frac{A}{B} \times \frac{D}{G}$.

Now, putting D and E back into neutral, slide H and K to the right until K meshes with B and the train between S and S_2 is $\frac{A}{B} \times \frac{B}{K}$. If H and K are slid to the left H will mesh with C and the train will be $\frac{A}{B} \times \frac{C}{H}$.

The levers which operate the two sliding units are interlocked in such a way that one of the units must be in neutral position before the other can be moved to the right or left of neutral.

178. Automobile Transmission. Fig. 191 is a diagram of the arrangement of the gears in a common type of automobile transmission which allows three speeds forward and one reverse.

The gear A is on the end of a sleeve driven directly from the motor. A turns freely on the end of the propeller shaft P. On the counter-shaft S are four gears, B, D, F, and G which are attached to each other and turn as a unit. The purpose of the system of gears is to make it possible for A, turning at a definite speed, to drive shaft P at three

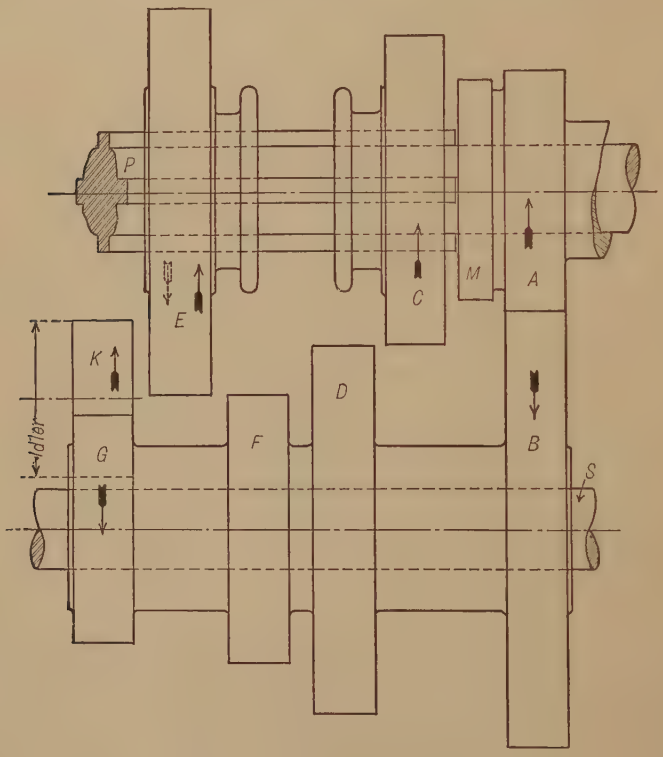

Fig. 191

different speeds in the same direction that A itself is turning, and at one speed in the direction opposite that of A.

B is in mesh with A and the counter-shaft unit is turning in a direction opposite that of A at a speed which is to the speed of A equal to $\frac{\text{Teeth in } A}{\text{Teeth in } B}$. With gears C and E in the positions shown, the counter-shaft unit is turning idle and the whole system is in neutral. On the left end of A is the hub M which has teeth on its circumference. In

the right end of gear C is a cavity with spaces into which the teeth of M can lock if C is moved to the right. C slides on a key, or keys, in shaft P so that when C turns P turns with it. If the gear-shifting lever is moved to the proper position C will be pushed over M thus locking C to A and the shaft P will be driven at the same speed as A. This puts the transmission in "high." If C is pushed to the left of its present position it will mesh with D and then

$$\frac{\text{Speed } P}{\text{Speed } A} = \frac{\text{Teeth in } A \times \text{Teeth in } D}{\text{Teeth in } B \times \text{Teeth in } C}.$$

This gives the "second" or "intermediate" speed. If C is put in the position shown and the shifting lever moved so as to take hold of gear E and move it to the right to mesh with F the speed ratio will be

$$\frac{\text{Speed } P}{\text{Speed } A} = \frac{\text{Teeth in } A \times \text{Teeth in } F}{\text{Teeth in } B \times \text{Teeth in } E}.$$

This gives the "third" or "low" speed. Pushing E to the left of its neutral position brings it into mesh with the idler K which is driven from G giving a speed ratio

$$\frac{\text{Speed } P}{\text{Speed } A} = \frac{\text{Teeth in } A \times \text{Teeth in } G}{\text{Teeth in } B \times \text{Teeth in } E},$$

and since the connection between G and E is through the idler, the direction of E and therefore of P is opposite that of A, giving the "reverse" drive.

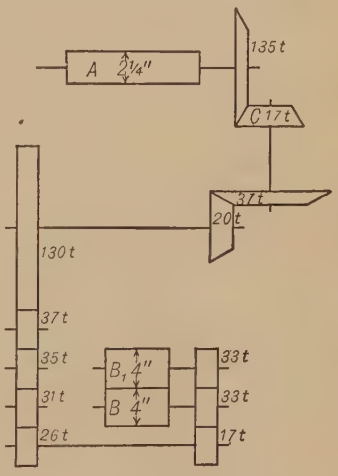

Fig. 192

179. Cotton Card Train. Fig. 192 shows the train in a cotton carding-machine. For the train we have the value

$$\frac{\text{turns } B}{\text{turns } A} = \frac{135}{17} \times \frac{37}{20} \times \frac{130}{26} \times \frac{17}{33} = +37.84.$$

In the machine the lap of cotton passing under the roll A is much drawn out in its passage through the machine, and it becomes necessary to solve for the ratio of the surface speeds of the rolls B and A. For this, since the surface speed equals $2\pi \times$ turns $\times$ radius or turns $\times \pi \times$ diameter,

$$\frac{\text{surface speed } B}{\text{surface speed } A} = \frac{\text{turns } B \times \text{diam. } B}{\text{turns } A \times \text{diam. } A}.$$

$$\therefore \frac{\text{surface speed } B}{\text{surface speed } A} = 37.84 \frac{4}{2.25} = 67.27.$$

180. Hoisting Machine Train. A train of spur gears is often used in machines for hoisting where the problem would be to find the ratio of the weight lifted to the force applied. In Fig. 193 the value of the train is

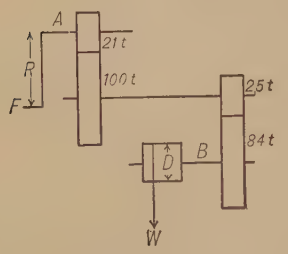

Fig. 193

$$\frac{\text{turns } B}{\text{turns } A} = \frac{21}{100} \times \frac{25}{84} = \frac{1}{16};$$

then, if $D = 15''$ and $R = 1\frac{1}{4}$ ft.,

$$\frac{\text{speed } W}{\text{speed } F} = \frac{1}{16} \times \frac{15}{30} = \frac{1}{32};$$

$$\therefore \frac{F}{W} = \frac{\text{speed } W}{\text{speed } F} = \frac{1}{32},$$

or if F were 50 lbs., W would be 1600 lbs. *if loss due to friction were neglected.*

181. Reduction Gear. Fig. 194, furnished by the Fellows Gear Shaper Co., shows a train of gears consisting of a pinion concentric with an annular, with three idle gears. The gears in this case are herring-bone gears.

Fig. 194

182. Designing Gear Trains. No definite rules or formulas can be followed in designing a train of gears to have a certain train value. The process is mainly one of "cut and try" until the desired result is obtained. There are, however, some general lines of attack which may be followed,

and which may best be understood by studying certain typical problems. If the value of the train is chosen arbitrarily, it may be found impossible to select gears which will give exactly the value called for.

Example 24. Let it be required to select the gears for a train in which the last gear shall turn 19 times while the first gear turns once, the direction of rotation being the same. No gear is to have less than 12 teeth nor more than 60 teeth.

Solution. The first step in the solution of this problem is the determination of the number of pairs of gears necessary to give a train value of 19 and keep the gears within the limits of size specified. If only one pair were used, making the driver as large as allowed, that is, 60 teeth, and the driven gear as small as allowed, that is, 12 teeth, the train value would be $\frac{60}{12}$ or 5. If a second driver of 60 teeth is made fast to the 12 teeth gear, and this drives a second gear of 12 teeth, as shown in Fig. 195, the train value becomes $\frac{60}{12} \times \frac{60}{12} = 25$. This is greater than the assigned value of 19, therefore, two pairs of gears will be sufficient to obtain a value of 19 without exceeding the specified limits of size. Having thus determined the number of gears necessary, the next step is the selection of the gears themselves to give the exact value of 19. This may be tried in several ways. First, since two pairs of gears are to be used, the square root of 19 may be taken. This is approximately 4.36. This does not differ greatly from $4\frac{1}{3}$. Now

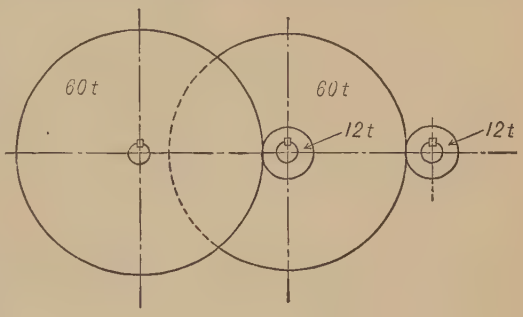

Fig. 195

$$\frac{4\frac{1}{3}}{1} \times \frac{19}{4\frac{1}{3}} = 19.$$

Multiply both numerator and denominator of the first fraction by 12, and of the second fraction by 3 and the equation becomes

$$\frac{52}{12} \times \frac{57}{13} = 19.$$

Therefore, a train of gears as shown in Fig. 196 will give the required train value of 19. If the directional relation were not correct an idler might be used.

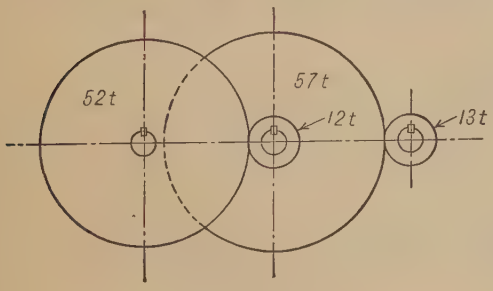

Fig. 196

Example 25. Let it be required to find suitable gears to drive a shaft at 4 *r.p.m.* from a shaft making 500 *r.p.m.*, using no gear of less than 24 teeth nor more than 96 teeth.

Solution. The train value in this case is $\frac{4}{500} = \frac{1}{125}$.

Since the smallest gear that can be used is 24 teeth and the largest 96 teeth, the train value between any gear and its driver cannot be less than $\frac{24}{96}$ or $\frac{1}{4}$.

Therefore $\frac{1}{4}$ must be multiplied by itself a sufficient number of times to obtain a final result less than $\frac{1}{1250}$. Now, $(\frac{1}{4})^3 = \frac{1}{64}$; then 3 pairs of gears will not be enough. But $(\frac{1}{4})^4 = \frac{1}{256}$, which is beyond the specified $\frac{1}{1250}$, hence 4 pairs will be proper to use.

The fourth root of $\frac{1}{1250}$ is approximately $\frac{1}{3\frac{1}{3}}$ or $\frac{3}{10}$.

A train of gears for a trial might be in the ratio of

$$\frac{3}{10} \times \frac{3}{10} \times \frac{3}{10} \times \frac{\frac{1}{1250}}{(\frac{3}{10})^3} = \frac{3}{10} \times \frac{3}{10} \times \frac{3}{10} \times \frac{8}{27}.$$

Multiplying numerator and denominator of each of the first three terms by 9 and of the last term by 3 gives.

$$\frac{27}{90} \times \frac{27}{90} \times \frac{27}{90} \times \frac{24}{81}.$$

Then a train, such as shown in Fig. 197, fulfils the required conditions.

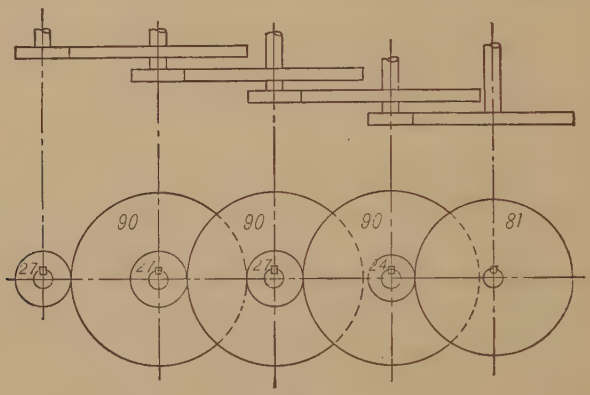

FIG. 197

Example 26. Where an error of a certain amount is allowable, as would very often be the case, the following method may be used to advantage.

Let the value of the train be 60 and $\frac{T}{t} = \frac{100}{20} = 5$,

where T represents the maximum number of teeth and t the minimum. It will be found that *three* pairs of gears are needed. Therefore take the *cube* root of 60, which is 3.91+, and write

$$\frac{3.91}{1} \times \frac{3.91}{1} \times \frac{3.91}{1} = 60, \text{ nearly.}$$

Since the small gears are not to have less than 20 teeth, and since $20 \times 3.91 = 78+$, a first approximation may be written

$$\frac{78}{20} \times \frac{78}{20} \times \frac{78}{20},$$

which will be found to equal 61.63; if this result is too greatly in error, a reduction of one or two teeth in the numerator or an increase in the denominator may give a closer result, as

$$\frac{77}{20} \times \frac{78}{20} \times \frac{78}{20} = 60.07.$$

Example 27. To design a train of four gears, with the axis of the last wheel coincident with the axis of the first wheel as in Fig. 188. The train value to be $\frac{1}{12}$. No gear to have less than 12 teeth. All gears to be of the same pitch.

Solution. Since there are two pairs in the train, the value $\frac{1}{12}$ must be separated into two factors and it is desirable to have these factors as nearly as may be of the same value. The square root of $\frac{1}{12}$ is between $\frac{1}{3}$ and $\frac{1}{4}$ so a trial pair of factors may be taken $\frac{1}{3} \times \frac{1}{4}$. Then letting the letters T_a, T_b, T_c, T_d represent the numbers of teeth in the gears A, B, C, D respectively (Fig. 188).

$$\frac{T_a}{T_b} \times \frac{T_c}{T_d} = \frac{1}{3} \times \frac{1}{4}.$$

Now, since the pitches are all alike,

$$T_a + T_b = T_c + T_d \text{ (see § 173).}$$

Let Z represent this sum. Then a value must be chosen for Z such that it may be broken up into two parts whose ratio is $\frac{1}{3}$ and also two parts whose ratio is $\frac{1}{4}$.

If Z is made equal to the least common multiple of $1 + 3$ and $1 + 4$, the condition will be satisfied. This L. C. M. is 20. Then $\frac{T_a}{T_b}$ would be $\frac{5}{15}$ and $\frac{T_c}{T_d}$ would be $\frac{4}{16}$.

But these values are too small for the numbers of teeth in the gears. Then numerator and denominator of both fractions must be multiplied by some number such that no number will be less than the number of teeth allowed in the smallest gear. In this case multiplying $\frac{5}{15}$ and $\frac{4}{16}$ each by $\frac{3}{3}$ gives $\frac{15}{45}$ and $\frac{12}{48}$.

Therefore T_a may be 15, $T_b = 45$, $T_c = 12$, $T_d = 48$.

The above method (Example 27) may be expressed as follows:

When both pairs have the same pitch.

If $\frac{t_1}{t_2} \times \frac{t_3}{t_4}$ are the factors of e (*i.e.*, the train value) expressed in lowest terms, then $T_a + T_b$ and $T_c + T_d$ must be made equal to the L. C. M. of $t_1 + t_2$ and $t_3 + t_4$ or to some multiple of the L. C. M.

When the pitches of the two pairs are different.

The case illustrated in Example 27 is not a practical one, because the stresses on the second pair of gears are always greater, requiring a greater circular pitch.

If the pitch number of A and $B = P_1$ and the pitch number of C and $D = P_2$, and if $\frac{p_1}{p_2} = \frac{P_1}{P_2}$ reduced to its lowest terms, then $T_a + T_b$ is made equal to the L. C. M. of $t_1 + t_2$ and $t_3 + t_4$ (or to some multiple of the L. C. M) multiplied by p_1, and $T_c + T_d$ is made equal to the L. C. M. (or the same multiple of the L. C. M.) multiplied by p_2.

CHAPTER VII

EPICYCLIC GEAR TRAINS

183. An epicyclic train of gears is a train in which some of the gears turn on fixed axes, while others turn on axes which are themselves in motion. The wheels are usually connected by a rigid link known as the train arm which rotates on the axis of one of the wheels of the train.

Assume that C, Fig. 198, is a gear carried by the arm A and pinned to A so that it cannot turn on its own axis. If A is caused to turn about S once, a reference mark V on C, which in the position shown is pointing downward, would point in every direction successively as A revolved and come finally to its present position when the arm had made a complete turn.

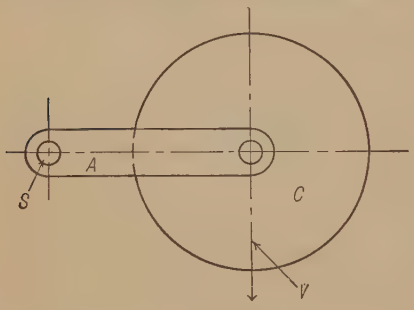

FIG. 198

If C is meshing with another gear on the axis S, and therefore turns on its axis at the same time that the axis revolves, the reference mark will swing around and point to its original direction a number of times equal to the algebraic sum of the speed of the arm and the speed of C on its axis. This resultant number of times that the reference mark returns to its original direction, having always turned completely over, is called the number of *absolute turns* that C makes, or its *absolute speed*. The speed of C on its own axis is called its *relative speed*, or speed relative to the arm. Either direction of rotation may be assumed as positive (+); then rotation in the opposite direction must be considered as negative (−).

Fig. 199 illustrates an epicyclic train, and the following description of its operation should be studied carefully in order to understand the principle of action. When this principle is clear the analysis of any epicyclic train is comparatively simple.

B is a gear turning with the shaft S which is in stationary bearings and is driven by the gears R and K. C is a gear meshing with B. The stud T on which C turns is carried by the arm A. Fast to the hub of A is the gear E, driven by the gear D. Attached to C is the gear F which drives G. G turns on the same axis as B, but must, of course, be free to turn at a different speed from B.

D and R receive their motion from outside sources. The resultant speed of G, due to the combined speeds of B and A, is the algebraic sum of the speeds which it would have when each moved with the other standing still.

If the gear D is first assumed not to turn, the arm A will be stationary, and the following equation will hold true

$$\frac{\text{Speed of } G}{\text{Speed of } B} = \frac{\text{Teeth in } B \times \text{Teeth in } F}{\text{Teeth in } C \times \text{Teeth in } G},$$

or

$$\textit{Speed of } G = \textit{speed of } B \times \textit{train value}. \qquad \text{(I)}$$

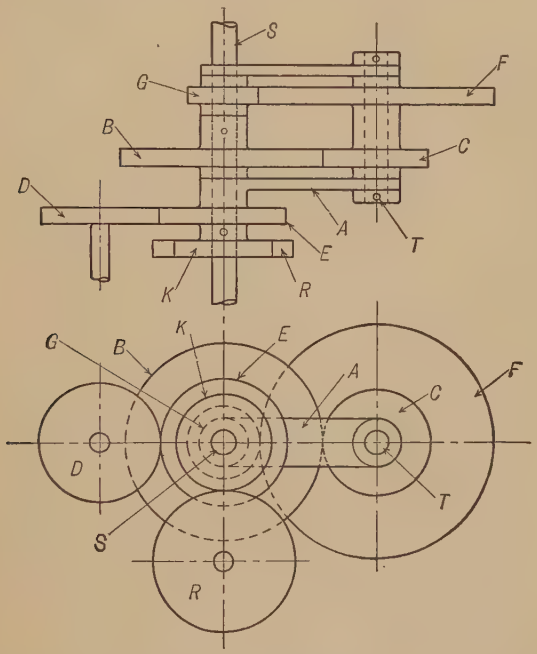

FIG. 199

If, on the other hand, the gear B is assumed not to turn and D turns at a definite speed, the arm A will revolve, the stud T will travel around S as an axis, C rolling around on B, and F rolling around on G. This will impart motion to G which may be found as follows: Suppose A to have a speed of a *r.p.m.* right-handed; then the speed of C on its own axis is the same as if A were held still and B turned with a *r.p.m.* left-handed. That is, C would have a speed on its axis of $a \times \frac{\text{Teeth in } B}{\text{Teeth in } C}$ *r.p.m.* right-handed, relative to its own axis, or relative to the arm.

This speed of C would impart to G, relative to the arm, a speed of $a \times \frac{\text{Teeth in } B \times \text{Teeth in } F}{\text{Teeth in } C \times \text{Teeth in } G}$ *r.p.m.* $= a \times$ Train value, left-handed.

But the arm is itself turning right-handed at a speed a *r.p.m.* Therefore, the actual speed of G due to the speed of A is

$$a - a \times \textit{train value}. \tag{II}$$

Combining (I) and (II)

$$\textit{Speed of } G = \textit{Speed of } B \times \textit{Train Value} + \textit{Speed of Arm} - \textit{Speed of Arm} \times \textit{Train Value}. \tag{58}$$

If n represents the absolute turns or speed of the last wheel of an epicyclic train (in this case G), m the absolute turns or speed of the first wheel (B), a the turns or speed of the arm (A), and e the train value, Equation (58) may be expressed thus

$$n = me + a - ae. \tag{59}$$

Equation (59) is commonly written

$$e = \frac{n - a}{m - a} \tag{60}$$

and, in this form, may be expressed in words thus:

$$\text{Train value} = \frac{\text{Turns last wheel relative to arm}}{\text{Turns first wheel relative to arm}} = \frac{\text{Absolute turns of last wheel} - \text{turns of arm}}{\text{Absolute turns of first wheel} - \text{turns of arm}}.$$

Problems relating to epicyclic trains may be solved by the formula given in Equation (59) or (60) or by another method known as the tabulation method. This consists in assuming that the motions of B and the arm (Fig. 199) take place successively instead of simultaneously. The gears are first assumed to be made fast to the arm so that there can be no relative motion. The arm is made to turn at the proper speed for a unit of time in the proper direction; all the gears will turn with it. Then the arm is held still and one of the gears (in this case B) is turned backward or forward enough to make its net number of turns equal to its known speed. The sum of the results produced by these two processes gives the net motion or speed of the other gear or gears.

If m, n, a, and e have the same meanings as in Equations (59) and (60) the above process may be tabulated thus:

	Turns of Arm	Turns of B	Turns of G
1° Train locked.....	a	a	a
2° Arm fixed.....	0	$m - a$	$(m - a)\,e$
3° Resultant motions.....	a	m	$(m - a)\,e + a$

In determining e, the sign is + if last wheel turns in same direction as first and − if opposite direction.

If the resultant number of turns of G thus obtained be equated to n the resulting equation is

$$n = (m - a)\, e + a$$

or

$$e = \frac{n - a}{m - a},$$

which is the same as Equation (60).

It is absolutely essential that the + or − sign precedes each of the quantities according as its value is positive or negative.

In applying either the formula or the tabulation method care must be taken to include only those gears which are a part of the epicyclic train. For instance, in Fig. 199 the gears D, E, R and K serve merely as drivers of members of the epicyclic train and do not enter into the formula or the tabulation.

184. Solution of Problems on Epicyclic Trains. The following examples will illustrate the application of the two methods of solving epicyclic trains. In some cases the formula is used and in other cases the tabulation method, while in a few examples both methods are used. Either method will apply to any problem and it is often desirable to solve by both for the purpose of checking.

Example 28. In Fig. 199 let B have 80 teeth, C 40 teeth, F 90 teeth and G 30 teeth. If B has a speed of 100 *r.p.m.* right-handed and A 60 *r.p.m.* left-handed, let it be required to find the speed of G.

Solution No. 1. Using Eq. (59) let right-handed rotation be assumed plus. Then $m = +100$, $a = -60$, $e = \frac{80}{40} \times \frac{20}{30} = 6$, and since with the arm at rest G would turn in the same direction as B, the value of e is plus. That is, $e = +6$. Substituting in Eq. (59),

$$n = 100 \times 6 + (-60) - (-60 \times 6) = 600 - 60 + 360 = 900.$$

Solution No. 2. Using the tabulation method.

	Arm	B	G
Gears locked to arm	− 60	− 60	− 60
Arm held still	0	+ 160	160 × 6
	− 60	+ 100	960 − 60
			= 900

Example 29. In Fig. 200 let gear B have 24 teeth and C 18 teeth. If B is held from turning and the arm makes 1 turn right-handed, let it be required to find how many absolute turns C makes.

Solution No. 1. Using Eq. 59, $m = 0$, $e = -\frac{24}{18} = -\frac{4}{3}$, $a = +1$ (assuming right-hand rotation is plus). Then, substituting in Eq. (59), $n = 0 + 1 - (-\frac{4}{3})$, or, $n = \frac{7}{3}$.

Solution No. 2. Using the tabular method:

	Arm	B	C
Gears locked to arm	+ 1	+ 1	+ 1
Arm held still	0	− 1	− 1 (− $\frac{4}{3}$)
	+ 1	0	+ $\frac{7}{3}$

Example 30. In Fig. 201 E is an annular gear which cannot turn, being fast to the frame of the machine. The arm A turns about the shaft S which is also the axis of the gears B and E. B has 24 teeth, C 20 teeth, D 16 teeth, and E 96 teeth. Let it be required to find the speed of the arm A to cause the gear B to have a speed of 75 *r.p.m.* left-handed.

Solution. Assume B to be the first wheel of the train and assume right-handed rotation as +:

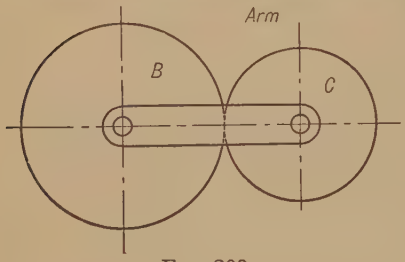

FIG. 200

Then referring to Eq. (59) $n = 0$, $m = -75$, $e = +\frac{24}{96} = +\frac{1}{4}$.

Substituting these values in the equation,

$$0 = 75 \times \tfrac{1}{4} + a - a \times \tfrac{1}{4},$$

whence

$$a = +25.$$

Therefore, A will have to have a speed of 25 *r.p.m.* right-handed to give the required speed to B.

Example 31. Sun and Planet Wheel. Fig. 202 shows an application of the two-wheel epicyclic train known as the **Sun and Planet Wheels,** first devised by James Watt to avoid the use of a crank, which was patented. In his device the epicyclic train arm was replaced by the stationary groove G, which kept the two wheels in gear. a represents the engine shaft, to which the gear D was made fast, B the connecting rod, attached to the walking beam. The gear C was rigidly attached to the end of the connecting rod. While with such an arrangement it is not strictly true that the gear C does not turn, yet its action on the gear D for the interval of one revolution of the epicyclic arm (that is, the line joining the centers of D and C) is the same as though C did not turn, since the position of C at the end of one revolution of the arm is the same as at the beginning.

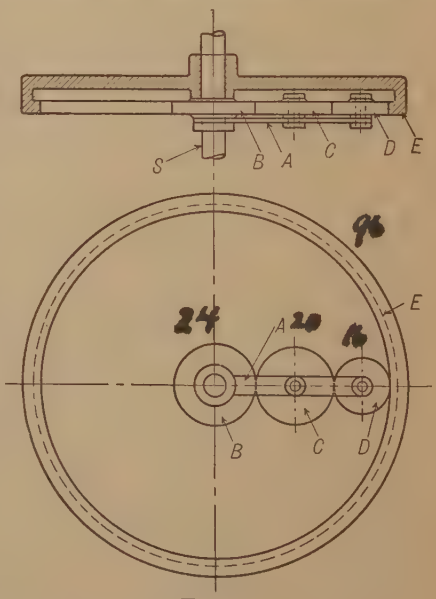

FIG. 201

Let it be assumed that the gears C and D have the same number of teeth.

Then the train value $= -1$. Let the arm ab make one turn.

Required to find the turns of D and therefore of the engine shaft.

Let m represent the turns of D, a the turns of the arm, n the turns of C.

Solution. From equation (60),

$$-1 = \frac{0 - 1}{m - 1},$$

whence $$m = +2.$$

That is, the engine shaft will make two turns every time the gear C passes around it.

Example 32. In the three-wheeled train, Fig. 203, let A have 55 teeth, and C have 50. A does not turn. To find the turns of C while the arm D makes +10 turns.

Solution. Using the tabular method

	A	C	Arm
Train locked	+10	+10	+10
Train unlocked, arm fixed	−10	$-10\left(\frac{55}{50}\right)$	0
Resultant motions	0	−1	+10

Or the wheel C turns −1 while the arm D turns +10.

If the gear C in Fig. 203 were given the same number of teeth as A, it would not turn at all. If there were more teeth in C than in A its resultant number of turns would be in the same direction as the arm.

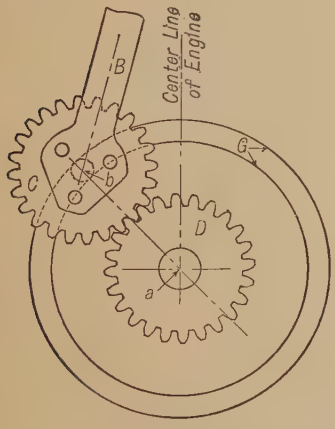

Fig. 202

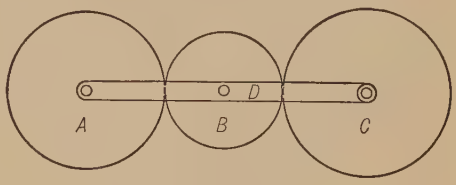

Fig. 203

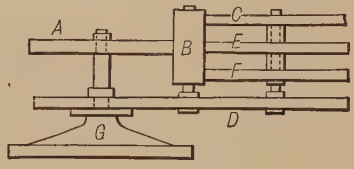

Fig. 204

Example 33. Ferguson's Paradox. In the device shown in Fig. 204, known as Ferguson's Paradox, all three of the cases just referred to occur in one mechanism.

Let the gear A have 60 teeth, C 61 teeth, E 60 teeth, F 59 teeth. B is an idle wheel connecting each of the others with A. The arm D turns freely on the axis of A and carries the axis which supports the other gears. A is fixed to the stand and therefore cannot turn. If the arm D is given one turn R.H. (+), required to find the turns of C, E, and F.

Solution. Using the tabular method

	A	D	C	E	F
Train locked	+1	+1	+1	+1	+1
Train unlocked, arm fixed	−1	0	$-\frac{60}{61}$	−1	$-\frac{60}{59}$
Resultant motions	0	+1	$+\frac{1}{61}$	0	$-\frac{1}{59}$

Example 34. Ford Transmission. Fig. 205 is a diagram of the planetary or epicyclic transmission as used in the Ford automobile. The shaft P, fast to the engine shaft, carries the piece L on which are clutch rings. Between these rings are other rings which turn with the drum K. The latter is fast to the propellor shaft M. Powerful springs urge the clutch rings together, except when prevented by the levers W. The friction between the clutch rings serves to connect L to

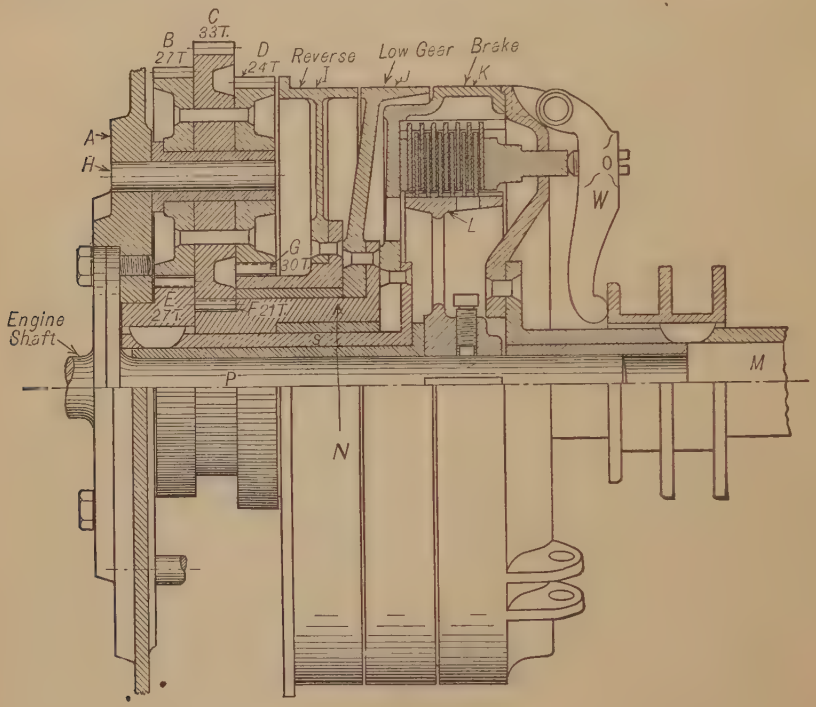

Fig. 205

K, thus making a direct connection between the engine shaft and the propellor shaft, furnishing the direct drive to the latter, which in turn drives the rear wheels. This gives "full gear" forward.

Fast to the front side of K is the sleeve S carrying the gear E, which meshes with the gear B running loosely on the stud H. This stud is carried by the piece A which is fast to the engine shaft. B is integral with the gears C and D. C meshes with F on the sleeve N fast to the drum J. D meshes with G on the hub of the drum I. A, turning with the engine and carrying the shaft H with it, constitutes the arm of two epicyclic trains. One of these trains is through the gears F, C, B, and E. The other train is through the gears G, D, B, E.

When the left pedal in the car is pressed forward a short distance the lever W is operated to release the pressure of the springs which hold the clutch rings in contact. The engine then runs idly without turning the propellor shaft. A further motion of the left pedal applies a brake band to the drum J, holding it from turning, thus holding the gear F at rest. C, rolling around the stationary gear F, and B around E, gives a speed to E dependent upon the relative numbers of teeth in F, C, B, and E.

This speed may be calculated as follows:

Using Eq. (60) m = turns of $F = 0$ and n the turns of E.

Assuming one turn of the engine, $a = +1$, $e = +\frac{21}{33} \times \frac{27}{27} = +\frac{7}{11}$.

Then $\frac{7}{11} = \frac{n-1}{0-1}$ whence $n = +\frac{4}{11}$. That is, the gear E makes $\frac{4}{11}$ of a turn for every turn of the engine, in the same direction as the engine, and carries the propellor shaft with it.

If the left pedal is allowed to come back to its normal position, releasing the drum J, and the hand lever operated to hold out the clutch, then if the middle pedal is pressed forward, it applies a brake to the drum I, thus holding the gear G stationary. This brings into action the epicyclic train G, D, B, E, giving motion to E in a direction opposite that of the engine.

This may be calculated as follows:

Letting m represent the turns of G and using the same formula as before

$$e = \tfrac{30}{24} \times \tfrac{27}{27} = \tfrac{5}{4}.$$

$$\frac{5}{4} = \frac{n-1}{0-1}, \quad \text{whence} \quad n = -\frac{1}{4}.$$

That is E, with the propellor shaft, makes $\frac{1}{4}$ turn for each turn of the engine and in the opposite direction.

When the right pedal is pressed forward a brake is applied to the drum K, retarding or stopping the propellor shaft. When this is done the drives should of course all be in neutral.

Example 35. All Spur Gear Differential. Fig. 206 is a diagram of the arrangement of gears in an automobile differential where no bevel gears are employed except the pair which transmits the motion from the propellor shaft. The large bevel gear A (usually a twisted bevel) is driven from the propellor shaft and carries the cage B which always turns with A. This cage supports the studs S on which are the small gears C and D. There are several pairs of these small gears equally spaced around the cage but one pair will be sufficient to consider in discussing the action of the mechanism. C meshes with the gear E

which is on the axle L, C also meshes with D, as shown, and D in turn meshes with the gear F on the axle R.

When the car is moving in a straight path so that the rear wheels are turning at the same angular speed, the cage B and all the gears inside it revolve as a unit and there is no relative motion of the gears. When the car starts to turn a curve, the wheel which is on the outside of the curve must travel farther than the inner wheel, and therefore

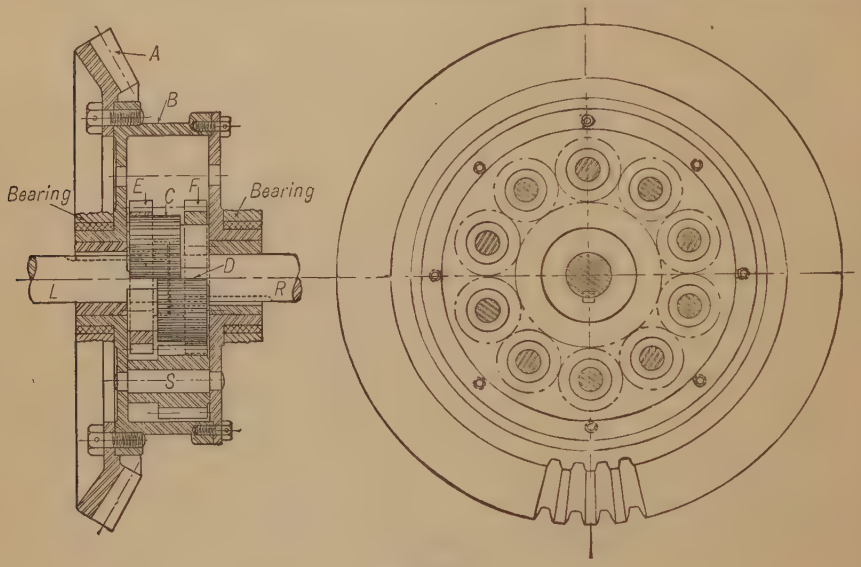

Fig. 206

must make more turns in a given time. The gears E, C, D, and F then begin to turn relative to each other and to the cage and the action becomes that of an epicyclic train with the cage, carrying the studs S, as the epicyclic arm.

This action can be seen more clearly if the car is supposed to be standing still with the right wheel (on the axle R) jacked up clear of the ground while the left wheel rests on the ground and is blocked to prevent it from rolling. Then E may be considered as the first wheel of the epicyclic train, C and D intermediate wheels, and F the last wheel. The train value between E and F is -1 since the gears E and F have the same number of teeth. Then, using equation (60) where m = the turns of gear E, a = turns of the cage and n the turns of F.

$$m = 0,\ a = +1 \text{ (assuming the large bevel to make one turn).}$$

Whence
$$-1 = \frac{n-1}{0-1} \text{ or } n = +2.$$

Therefore with one wheel at rest the other wheel will turn twice as fast as the large bevel.

With both wheels turning, but one of them turning faster than the other, similar relative motion takes place. For example, suppose that the car is turning a corner such that the right wheel must turn twice as fast as the left one.

Then, using the same notation as above,

$$n = 2\,m;$$

whence $$-1 = \frac{2\,m - a}{m - a},$$

or $$m = \tfrac{2}{3}\,a.$$

Example 36. Triplex Pulley Block. Fig. 207 shows a vertical section and side view, with part of the casing removed, of a triplex pulley

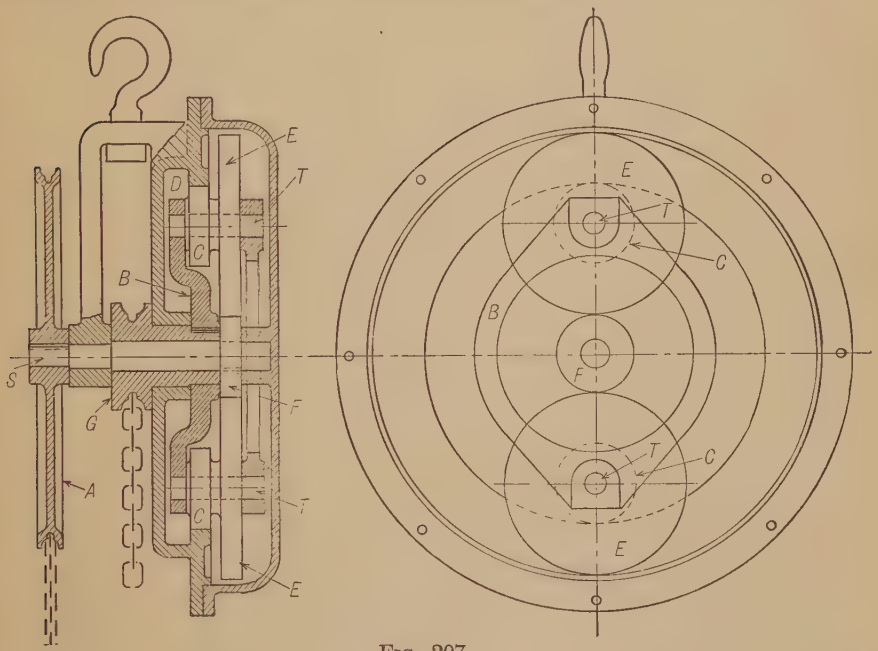

Fig. 207

block. S is the shaft to which the hand chain wheel A is keyed. Also keyed to S is the gear F meshing with the two gears E. The gears E turn on studs T which are carried by the arm B, the latter being keyed to the hub of the load chain wheel G. The gears C are integral with E and mesh with the annular D which is a part of the stationary casing. The mechanism is an epicyclic train. F is the first wheel of the train and has a speed imparted to it by the turning of the hand chain wheel A. The annular D is the last wheel of the train and does not turn. The train value is

$$-\frac{\text{Teeth in } F}{\text{Teeth in } E} \times \frac{\text{Teeth in } C}{\text{Teeth in } D}.$$

Assuming one turn of A, the turns of the arm B may be found, and, therefore, the turns of G. Hence, knowing the angular speed of A and its diameter, and the angular speed of G and its diameter, the relative linear speeds of the hand chain and the load chain can be calculated. The load will then be to the force exerted on the hand chain as the speed of the hand chain is to the speed of the load chain, friction being neglected.

185. Epicyclic Bevel Trains. Fig. 208 represents a common form of epicyclic bevel train, consisting of the two bevel-wheels D and E attached to sleeves free to turn about the shaft extending through them. This shaft carries the cross at F which makes the bearings for the idlers GG connecting the bevels D and E (only one of these idlers is necessary, although the two are used to form a balanced pair, thus reducing friction and wear). The shaft F may be given any number of turns by means of the wheel A, at the same time the bevel D may be turned as desired, and the problem will be to determine the resulting motion of the bevel E. The shaft and cross F here correspond with the arm of the epicyclic spur-gear trains.

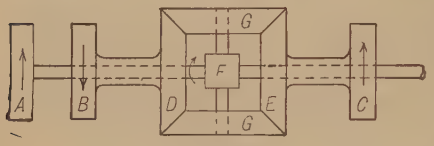

FIG. 208

When the bevels are arranged in this way the wheels D and E must have the same number of teeth, and the train value is -1. It will be found clearer in these problems to assume that the motion is positive when the nearer side of the wheel moves in a given direction, say upward, in which case a downward motion would be negative; or if a downward motion is assumed as positive, then upward motion would be negative.

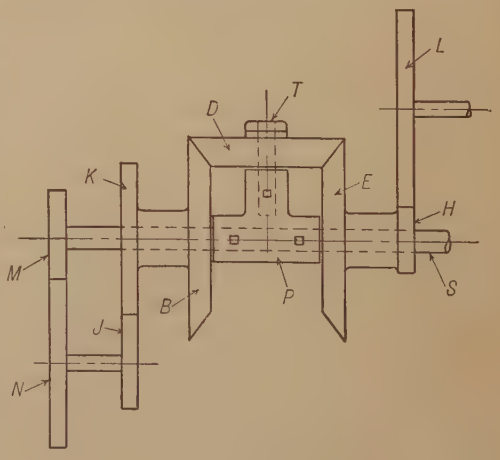

FIG. 209

Example 37. In Fig. 209 B and E are two bevel gears running on shaft S, but not fast to it. Attached to the collar P, which is set screwed and keyed to S, is a stud T on which turns freely the gear D meshing with B and E. B and E are of the same size and T is at right angles with S. J is a gear having 25 teeth and driving the 40-tooth gear K which is fast to B. L is a 51-tooth gear driven by the 17-tooth gear H which is fast

to E. N is a 45-tooth gear fast to the same shaft as J and drives the 20-tooth gear M which is fast to S. It is required to find the speed of L if J makes 40 *r.p.m.*

Solution. The first step is to pick out those gears which are a part of the epicyclic train. These are evidently B, D, and E. The epicyclic arm is T. Assume B as the first wheel of the epicyclic train, E the last wheel, and, letting m represent the speed of B, n the speed of E, a the speed of S and e the train value between E and B. Also assume direction in which J turns as positive. Using Eq. (59),

$$e = -1,$$
$$m = -\tfrac{25}{40} \times 40 \text{ r.p.m.} = -25 \text{ r.p.m.},$$
$$a = -\tfrac{45}{20} \times 40 = -90.$$

Then, substituting in Eq. (59),

$$n = (-25) \times (-1) + (-90) - \{(-90) \times (-1)\}$$
$$= 25 - 90 - 90$$
$$= -155 \text{ r.p.m.} = \text{speed of } E.$$
$$\text{Speed of } L = -155 \times (-\tfrac{17}{41}) = 51\tfrac{2}{3}.$$

Therefore, L has a speed of $51\frac{2}{3}$ *r.p.m.* in the same direction as J.

This problem may be solved by the tabulation method also, the process being the same as for an all spur epicyclic train.

Example 38. Bevel Gear Differential. Fig. 210 shows the arrangement of gears in the differential of an automobile. Shaft S is driven from the motor and has keyed to it the bevel gear D meshing with E which turns loosely on the hub of the gear H, the latter being keyed to the axle of the left wheel. E has projections on it which carry the studs T furnishing bearings for the gears R. There are several of these gears in order to distribute the load. The gears R mesh with H which is, as has been said, fast to the axle of the left wheel, and with K which is fast to the axle of the right wheel. When the automobile is going straight ahead D drives E and all the other gears revolve as a unit with E without any relative motion. As soon, however, as the car starts to turn a corner, say toward the right, the left wheel will have to travel further, and therefore the shaft B must turn faster than C. Then the gears begin to move relative to each other, the action being that of an epicyclic train.

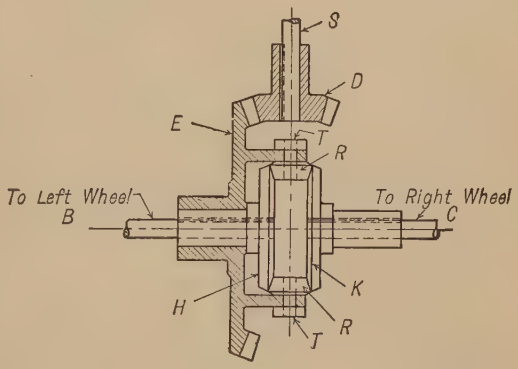

FIG. 210

Let it be assumed that the right wheel is jacked up so that the axle C and gear K may turn freely, while the left wheel remains on the ground and is held from turning, thus holding gear H from turning. Consider H as the first wheel of the train, E being the arm. Required to find the turns of C for one turn (+) of E.

Solution. Using equation (60)

$$-1 = \frac{n-1}{0-1}.$$

Whence $$n = 2.$$

That is, the right wheel will turn twice as fast as the gear E.

Example 39. Water Wheel Governor. An epicyclic bevel train has been used in connection with a train containing a pair of cone pulleys, in a form of water-wheel governor for regulating the supply of water to the wheel. Fig. 211 is a diagram for this train, the position of the belt connecting the cone pulleys being regulated by a ball governor connecting by levers with the guiding forks of the belt. The governor is so regulated that when running at the mean speed the belt will be in its mid-position, at which place the turns of E and D should be equal, and opposite in direction, in which case the arm F will not be turning. If the belt moves up from its mid-position, and if A turns as shown, the arm F will turn in the same direction as the wheel E.

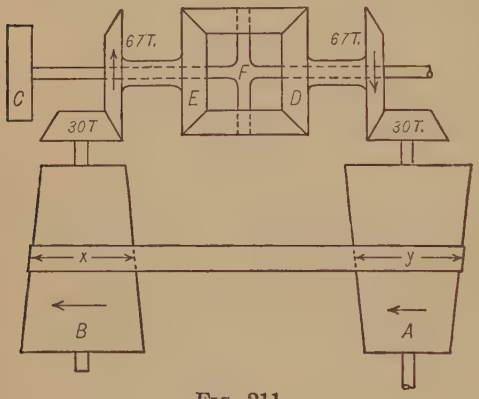

FIG. 211

With the numbers of teeth as shown in the figure, let it be required to find the ratio of the diameters $\frac{y}{x}$ if C is to turn downward once for 25 turns of A in the direction shown; also to determine whether the belt shall be crossed or open.

Solution. Let E be considered as the first wheel of the train. Then, to use equation (59),

$$n = \text{turns } A \times \tfrac{30}{67} = 25 \times \tfrac{30}{67} \text{ downward } (+).$$
$$e = -1, \qquad a = 1.$$
$$m = \text{turns } A \times \frac{y}{x} \times \frac{30}{67} = 25 \times \frac{30}{67} \times \frac{y}{x}.$$

Then, substituting in equation (59),

$$25 \times \frac{30}{67} = -1\left(25 \times \frac{30}{67} \times \frac{y}{x}\right) + 1 - (-1)$$

or

$$\frac{y}{x} = -\frac{25 \times \tfrac{30}{67} - 2}{25 \times \tfrac{30}{67}} = -\frac{308}{375}.$$

The minus sign in this value of $\frac{y}{x}$ signifies that the value m (in which $\frac{y}{x}$ first appears) must be negative; that is, E must turn in the opposite direction from D. Hence the cone B must turn in the same direction as A and the belt be open.

Example 40. The bevel train may be a *compound train*, as shown in Fig. 212. Here the train value, instead of being -1, is $-\frac{12}{12}\frac{5}{2} \times \frac{2}{1}\frac{8}{5} = -\frac{5}{9}\frac{0}{}$, if E is considered as the first wheel.

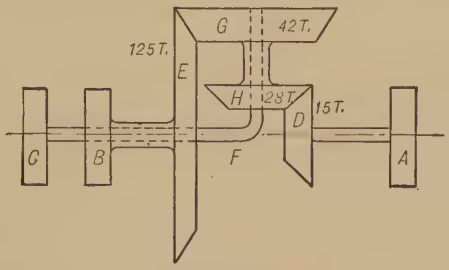

FIG. 212

Letting m represent the turns of E, n the turns of D, and a the turns of the arm (same as of C) and using Equation (60), and assuming A to make + 40 turns and B to make − 10 turns,

$$-\frac{50}{9} = \frac{40 - a}{-10 - a}.$$

Whence $$a = -1\frac{40}{59}.$$

Or C will turn $1\frac{40}{59}$ times in the same direction as B and E.

CHAPTER VIII

INCLINED PLANE, WEDGE, SCREW, WORM AND WHEEL

186. Inclined Plane and Wedge. The inclined plane and wedge will be considered only as mechanical elements for producing motion or exerting force. In this sense they act essentially the same. In Fig. 213, P represents a wedge, or solid, whose lower surface mn is horizontal, resting on a horizontal surface XX and free to be moved along that surface. The upper surface mo is inclined at an angle with the horizontal. In Fig. 213 the back surface no is perpendicular to mn. S is a slide which may move up or down in the guides G, the lower end being inclined or beveled at the same angle as the upper surface of P, on which it rests. Suppose that P is moved to the left a distance mm_1, so as to occupy the position shown by the dotted lines. It is evident that S is forced up a distance dd_1. If the length b and height a of P are known, it is possible to calculate the amount S will move for any known movement of P.

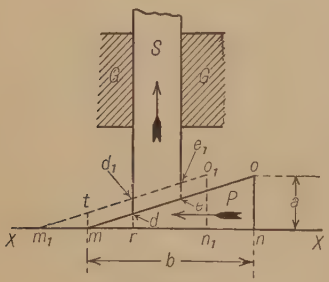

FIG. 213

Draw a vertical line mt meeting m_1o_1 at t. Then $mt = dd_1$ since they are sides of a parallelogram. The triangles m_1mt and $m_1n_1o_1$ are evidently similar. Therefore,

$$\frac{mt}{o_1n_1} = \frac{mm_1}{m_1n_1}.$$

But
$$o_1n_1 = on,$$
$$mt = dd_1$$

and
$$m_1n_1 = mn.$$

Therefore
$$\frac{dd_1}{on} = \frac{mm_1}{mn},$$

or
$$dd_1 = mm_1 \times \frac{on}{mn} = mm_1 \tan omn, \qquad (61)$$

or, in words, *the distance the slider rises is equal to the distance the wedge moves multiplied by the ratio of the height of the wedge to its length.*

In Fig. 214 a wedge is shown in which the end *no* is not perpendicular to *mn*. The same method of calculating the rise of the slider *S* would be used as in the previous case except that the vertical height *ok* is used in place of the length *no*, the shape of the back end of course having no effect on the motion of *S*.

The wedge in Fig. 215 is itself raised when pushed to the left, due to its sliding upon the inclined stationary surface of *K*, and carries *S*

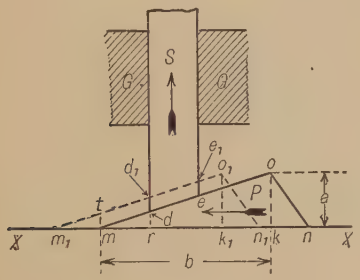

Fig. 214

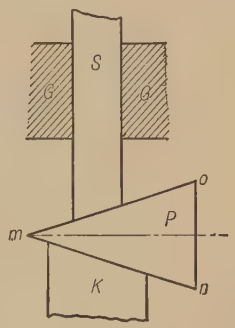

Fig. 215

up with it. It also gives an additional rise to *S* due to the slant of the surface *mo*. The resultant rise of *S* is, therefore, the sum of the two.

It should be noticed that the above laws hold true only when the direction of motion of the slider *S* is perpendicular to the direction in which the wedge moves.

187. Screw Threads. If the top surface *mo* of the wedge shown in Fig. 213 is assumed to be covered with a very thin strip of flexible material and this strip is wound around a cylinder whose circumference is equal to the length *b*, the angle of inclination with the horizontal remaining the same, it will assume a helical form as shown in Fig. 216. If the slide *S* has a point which reaches out and rests on the top surface of the strip, and the cylinder is turned in the direction of the arrow, *S* will be raised. The action of the helical surface on *S* is exactly the same as the action of the wedge in Fig. 213. One complete turn of the cylinder will raise *S* a distance of *P*. One-half a turn will raise *S* a distance $\frac{P}{2}$, and so on. In Fig. 217 a similar arrangement is shown, except that, in this case, *S* is stationary and the cylinder is free

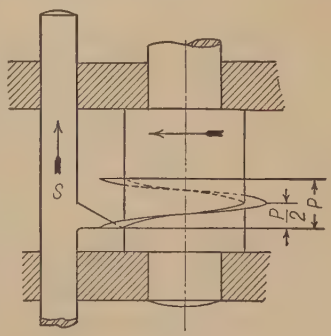

Fig. 216

to move endwise as well as turn, the weight of the cylinder resting on the point of S through the helical blade. Now, if the cylinder is given one turn in the same direction as before, it will be lowered a distance P.

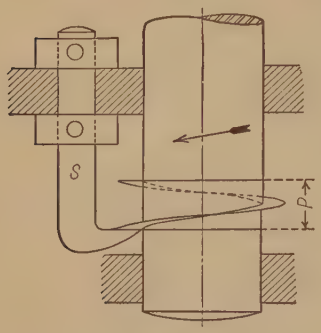

FIG. 217

A more exact description of the surface would be to say that it is generated by a radial line always perpendicular to the axis of the cylinder and with its inner end in contact with a helix of lead = P on the surface of the cylinder.

Fig. 218 shows a cylinder with a strip wound around it in the same way as in the preceding figures only the strip here is very much thicker and is wound around several times. In actually making such a cylinder of metal a solid cylinder of diameter D would be taken and a helical groove cut around it, the metal left between the successive turns of the groove thus constituting the "helical strip." A cylinder so formed is called a **screw,** the projecting part, which we have called the helical strip, being known as the **screw thread.** The action of such a thread on its follower is exactly the same as just described for Fig. 216 or 217. Instead of using a single projecting point or surface for the thread to act against, as has been assumed in these figures, a hole with a corresponding thread inside it is formed, this thread being of the proper size, slant, and shape to just fit into the grooves of the screw. The piece which contains such a hole is known as a **nut.** (See Fig. 219.)

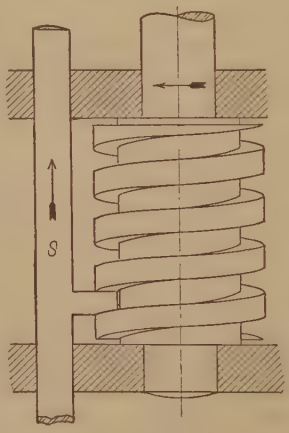

FIG. 218

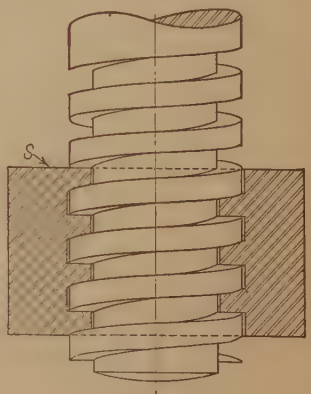

FIG. 219

188. Forms of Screw Threads. There are several forms of threads in general use. The more common ones are shown in Figs. 220 to 223. In Fig. 220 is shown the **square thread** used for

supporting or moving a load as in a jack-screw. In Fig. 221 is shown the thread ordinarily known as the **Acme thread** which is similar to the square thread except that its sides slope slightly, giving a stronger thread and making it possible to open and close a split nut around it. Such a thread is used on the lead screw of a lathe and in similar places where the screw moves the carriage and where it is necessary to separate the two halves of the nut on which it acts when it is desired to break the connection between the screw and the carriage.

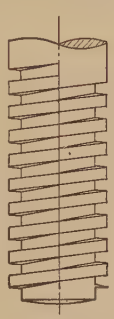
Fig. 220

Fig. 221

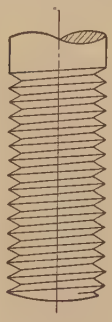
Fig. 222

Fig. 223

Figs. 222 and 223 show the **V thread,** which is the kind commonly used on bolts, machine screws, and, in fact, for most purposes where the screw and nut serve for holding purposes. It is also used in light apparatus for causing motion. These two forms are alike except for a slight difference in the angle of the sides and a difference in shape at the point and root. Figs. 224 to 227, with the accompanying tables, show the shapes and standard proportions of the above forms of threads.

U. S. STANDARD SCREW THREADS

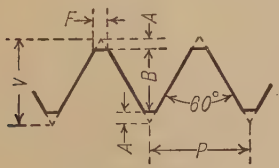

Fig. 224

$$A = \frac{V}{8} \qquad F = \frac{P}{8},$$

$$B = \tfrac{3}{4}\,V = \tfrac{5}{8}\,P \text{ nearly.}$$

Dia. Screw.	Threads per In.	Dia. Screw.	Threads per In.	Dia. Screw.	Threads per In.	Dia. Screw.	Threads per In.	Dia. Screw.	Threads per In.
$\frac{1}{4}$	20	$\frac{3}{4}$	10	$1\frac{1}{2}$	6	3	$3\frac{1}{2}$	5	$2\frac{1}{2}$
$\frac{5}{16}$	18	$\frac{13}{16}$	10	$1\frac{5}{8}$	$5\frac{1}{2}$	$3\frac{1}{4}$	$3\frac{1}{2}$	$5\frac{1}{4}$	$2\frac{1}{2}$
$\frac{3}{8}$	16	$\frac{7}{8}$	9	$1\frac{3}{4}$	5	$3\frac{1}{2}$	$3\frac{1}{4}$	$5\frac{1}{2}$	$2\frac{3}{8}$
$\frac{7}{16}$	14	$\frac{15}{16}$	9	$1\frac{7}{8}$	5	$3\frac{3}{4}$	3	$5\frac{3}{4}$	$2\frac{3}{8}$
$\frac{1}{2}$	13	1	8	2	$4\frac{1}{2}$	4	3	6	$2\frac{1}{4}$
$\frac{9}{16}$	12	$1\frac{1}{8}$	7	$2\frac{1}{4}$	$4\frac{1}{2}$	$4\frac{1}{4}$	$2\frac{7}{8}$		
$\frac{5}{8}$	11	$1\frac{1}{4}$	7	$2\frac{1}{2}$	4	$4\frac{1}{2}$	$2\frac{3}{4}$		
$\frac{11}{16}$	11	$1\frac{7}{8}$	6	$2\frac{3}{4}$	4	$4\frac{3}{4}$	$2\frac{5}{8}$		

WHITWORTH OR ENGLISH STANDARD SCREW THREAD

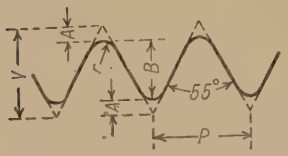

$$A = \frac{V}{6} = 0.16\,P,$$

$$B = 0.64\,P \qquad r = 0.137\,P.$$

FIG. 225

Dia. Screw.	Threads per In.	Dia. Screw.	Threads per In.	Dia. Screw.	Threads per In.	Dia. Screw.	Threads per In.	Dia. Screw.	Threads per In.
$\frac{1}{4}$	20	$\frac{5}{8}$	11	1	8	$1\frac{3}{4}$	5	3	$3\frac{1}{2}$
$\frac{5}{16}$	18	$\frac{11}{16}$	11	$1\frac{1}{8}$	7	$1\frac{7}{8}$	$4\frac{1}{2}$	$3\frac{1}{4}$	$3\frac{1}{4}$
$\frac{3}{8}$	16	$\frac{3}{4}$	10	$1\frac{1}{4}$	7	2	$4\frac{1}{2}$	$3\frac{1}{2}$	$3\frac{1}{4}$
$\frac{7}{16}$	14	$\frac{13}{16}$	10	$1\frac{7}{8}$	6	$2\frac{1}{4}$	4	$3\frac{3}{4}$	3
$\frac{1}{2}$	12	$\frac{7}{8}$	9	$1\frac{1}{2}$	6	$2\frac{1}{2}$	4	4	3
$\frac{9}{16}$	12	$\frac{15}{16}$	9	$1\frac{5}{8}$	5	$2\frac{3}{4}$	$3\frac{1}{2}$		

ACME THREADS

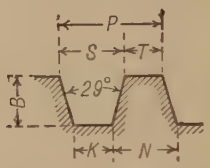

FIG. 226

Threads.	*B*	*T*	*K*	*S*	*N*	Threads.	*B*	*T*	*K*	*S*	*N*
16	0.048	0.023	0.018	0.039	0.044	$1\frac{3}{5}$	0.323	0.232	0.226	0.393	0.399
10	0.060	0.037	0.032	0.063	0.068	$1\frac{1}{2}$	0.343	0.247	0.242	0.419	0.425
9	0.066	0.041	0.036	0.070	0.075	$1\frac{5}{11}$	0.354	0.255	0.250	0.433	0.438
8	0.073	0.046	0.041	0.079	0.084	$1\frac{1}{3}$	0.385	0.278	0.273	0.472	0.477
7	0.081	0.053	0.048	0.090	0.095	$1\frac{3}{13}$	0.416	0.301	0.296	0.511	0.516
6	0.093	0.062	0.057	0.105	0.110	$1\frac{1}{7}$	0.448	0.324	0.319	0.551	0.556
$5\frac{1}{2}$	0.104	0.070	0.064	0.118	0.123	$1\frac{1}{15}$	0.479	0.348	0.342	0.590	0.595
5	0.110	0.074	0.070	0.126	0.131	1	0.510	0.371	0.366	0.629	0.635
$4\frac{1}{2}$	0.121	0.082	0.077	0.140	0.145	$\frac{16}{17}$	0.541	0.394	0.389	0.669	0.674
4	0.135	0.093	0.088	0.157	0.163	$\frac{8}{9}$	0.573	0.417	0.412	0.708	0.713
$3\frac{1}{2}$	0.153	0.106	0.101	0.180	0.185	$\frac{16}{19}$	0.604	0.440	0.435	0.747	0.753
$3\frac{1}{5}$	0.166	0.116	0.111	0.197	0.202	$\frac{4}{5}$	0.635	0.463	0.458	0.787	0.792
3	0.177	0.124	0.118	0.210	0.215	$\frac{16}{21}$	0.666	0.487	0.481	0.826	0.831
$2\frac{2}{3}$	0.198	0.139	0.134	0.236	0.241	$\frac{8}{11}$	0.698	0.510	0.505	0.865	0.870
$2\frac{1}{2}$	0.210	0.148	0.143	0.252	0.257	$\frac{16}{23}$	0.729	0.533	0.528	0.905	0.910
$2\frac{2}{7}$	0.229	0.162	0.157	0.275	0.280	$\frac{2}{3}$	0.760	0.556	0.551	0.944	0.949
2	0.260	0.185	0.180	0.315	0.320	$\frac{8}{13}$	0.823	0.603	0.597	1.023	1.028
$1\frac{7}{9}$	0.291	0.209	0.203	0.354	0.359	$\frac{4}{7}$	0.885	0.649	0.644	1.101	1.106
.....	..	..	..	..	..	$\frac{8}{15}$	0.948	0.695	0.690	1.180	1.185
.....	..	..	..	..	..	$\frac{1}{2}$	1.010	0.741	0.736	1.259	1.264

SQUARE THREADS

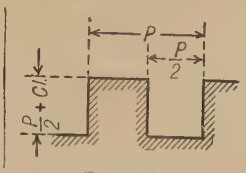

FIG. 227

Threads per inch may be about $\frac{3}{4}$ of the U. S. Standard on both Acme and Square.

189. Single and Multiple Threads. All of the threads shown in the preceding illustrations are single threads; that is, the threads are formed by the metal left between the successive turns of a single helical groove cut around and around the cylinder. If two parallel helical grooves are cut, the metal remaining will constitute a *double* thread; three parallel grooves will leave a *triple* thread, and so on. The single, double, and triple threads are illustrated in Figs. 228, 229, and 230, respectively. It will be noticed on the single thread (Fig. 228) that

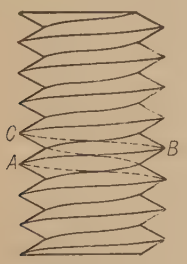

Single Thread

FIG. 228

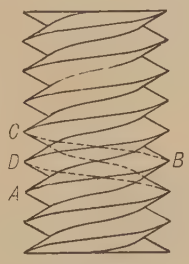

Double Thread

FIG. 229

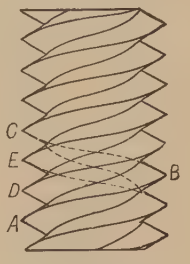

Triple Thread

FIG. 230

if the finger be placed on any point of the thread, as at A, and is moved along the thread until it has gone once around the screw, it will come to the point C. That is, in moving once around the screw the finger has advanced along the screw a distance AC. On the double thread (Fig. 229) if the finger starts at A and follows the thread once around, it will come to C, but this time there is a point D which lies between A and C. D is the point of the second or parallel thread. Similarly, if the finger follows a thread in Fig. 230 once around from A to C, two points D and E will lie between A and C. A multiple thread may be used when there is need for a fine thread having a large "lead" (see § 190).

190. Lead and Pitch of a Screw. The distance AC which the thread advances along the screw in one turn around is sometimes

called the *pitch*. A better name, however, is the **lead.** This definition of *lead* applies equally to single and multiple threads, while the term **pitch** is usually applied to the distance from one point to the next, regardless of the condition of the screw being single or multiple, and will be so used in this book. Lead is never used in this sense. In the case of a single threaded screw the lead and pitch are the same. If a nut is stationary and the screw is turned once around, it will move along through the nut a distance equal to the lead. If the screw is held from moving endwise but can turn, while the nut is held from turning but is free to move along the screw, one turn of the screw will move the nut a distance equal to the lead.

191. Threads per Inch. The size of a thread on a screw is commonly specified by stating the number of threads which the screw has in an inch of its length. For example, Fig. 231 represents the side of a

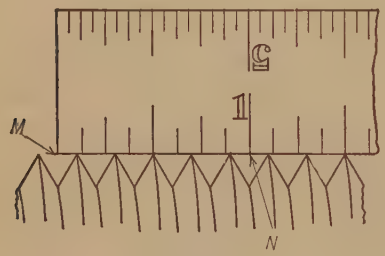

Fig. 231

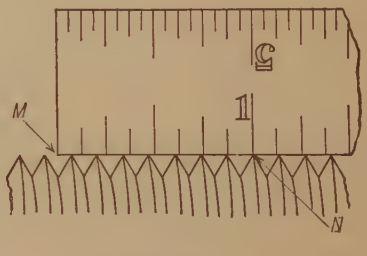

Fig. 232

screw with a scale laid against it so that the line M is over the center of a groove. The line N, which is an inch from M, comes over the center of another groove or another turn of the same groove and there are five whole thread points between M and N. This screw would be described as a screw having five threads to the inch, no account being taken of its being single or double. In Fig. 232 the line M is placed over the center of a space and the line N happens to come over the center of a thread point with seven whole thread points between. There are, therefore, seven and one-half threads per inch on this screw. The number of threads per inch is the reciprocal of the pitch and for a single threaded screw is also the reciprocal of the lead.

192. Right-hand and Left-hand Threads. The thread may wind around the screw in such a way that it slants downward from right to left as one looks at it, as shown in Fig. 233, in which case it is called a *right-hand* thread; or, it may slant downward from left to right as one looks at it, as shown in Fig. 234, when it is called a *left-hand* thread. If the screw with the right-hand thread is turned in the direction of

the Arrow A, Fig. 233, it will move downward through the stationary nut, or if the screw cannot move endwise the nut will be drawn up. The screw with the left-hand thread would have to be turned in the direction of the arrow B (Fig. 234), to move downward or to draw the nut up. If one were looking at the end of a right-hand screw and turned it *right-handed* or *clockwise*, it would move away from him, whereas a left-handed screw looked at endwise and turned *left-handed* or *anti-clockwise* would move away.

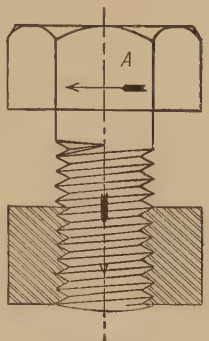

FIG. 233

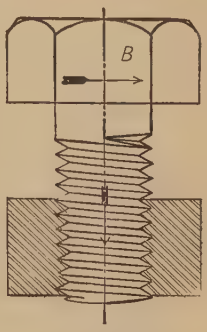

FIG. 234

193. Relation between the Speed of a Screw or Nut and the Speed of a Point on the Wrench or Handle. In Fig. 235 suppose the screw S is supported in a bearing. Collars H and B prevent it from moving endwise. The lead of the screw is P inches. S fits into a nut N which is free to slide along the guides G which also keep it from turning. A crank with a handle K is fast to the end of the screw, the center of K

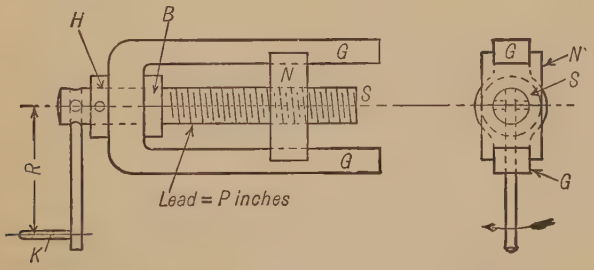

FIG. 235

being at a distance of R inches from the axis of the screw. It is now required to find a method of determining the relation between the linear speed of the handle K and of the nut N. If the crank is given one complete turn it will, of course, turn the screw once and the nut will move along the guides a distance P inches. While the crank turns once the center of K moves over the circumference of a circle whose radius is R, therefore it moves over a distance $2\pi R$ inches. Therefore

$$\frac{\text{Linear speed of } N}{\text{Linear speed of } K} = \frac{P}{2\pi R}. \qquad (62)$$

Also, since the forces at the two points are inversely as the speeds, neglecting friction,

$$\frac{\text{Force at } N}{\text{Force at } K} = \frac{2\pi R}{P}. \tag{63}$$

In Fig. 236, which shows an ordinary jack-screw, the exact value of the speed ratio differs slightly from that expressed by Eq. (62). Here the point K at which the force is applied rises with the screw so that in making a complete turn the point K moves over a helix whose diameter is $2R$ and whose lead is equal to that of the screw. The formula for the length of a helix is $\sqrt{2\pi R^2 + P^2}$ so that the actual speed ratio is

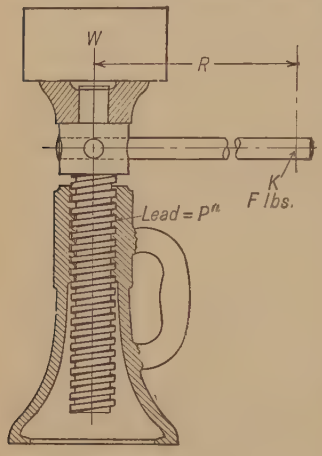

Fig. 236

$$\frac{\text{Linear speed of } W}{\text{Linear speed of } K} = \frac{P}{\sqrt{2\pi R^2 + P^2}}. \tag{64}$$

The lead (P) is so small relative to R that the value

$$\sqrt{2\pi R^2 + P^2}$$

differs only very slightly from $2\pi R$. Accordingly, although Eq. (64) is the correct one, Eq. (62) is usually accurate enough for all practical purposes.

194. Compound or Differential Screws. Fig. 237 illustrates the style of screw known as a *differential screw*. A part S of the screw itself has a thread whose lead is P inches and fits into a nut T which is a part of the stationary frame. The other end S_1 of the screw has a different thread, of lead P_1 inches which fits the nut N. This nut may slide along the guides G but is held by the guides from turning. As the screw is turned the motion of the nut is the resultant of the movement of the screw S through the nut T and of the nut N along S_1. Suppose, for example, that $P = \frac{1}{2}$ in. and $P_1 = \frac{7}{16}$ in., both being right-handed screws. If now the handle K is turned right-handed, as seen from the left, the whole screw moves along through T toward the right $\frac{1}{2}$ in. and if it were not for the thread S_1 N would move to the right $\frac{1}{2}$ in.

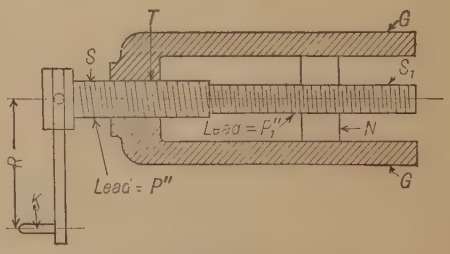

Fig. 237

At the same time, however, S_1 has drawn N back upon itself $\frac{7}{16}$ in. so that the net movement of N toward the right is $\frac{1}{2}$ in. $-\frac{7}{16}$ in. or $\frac{1}{16}$ in. Again, suppose $P = \frac{1}{2}$ in. right hand and $P_1 = \frac{7}{16}$ in. left hand. One turn of the handle in the same direction as before will advance S through T $\frac{1}{2}$ in. and at the same time carry N off S_1 $\frac{7}{16}$ in., so that the net movement of N to the right is $\frac{1}{2} + \frac{7}{16}$ in. or $\frac{15}{16}$ in. A device of the first sort may be used for obtaining a very small movement of the nut for one turn of the screw without the necessity of using a very fine thread.

195. Examples on Velocity and Power of Screws.

Example 41. In Fig. 238 suppose it is required to find the load W, which, suspended from the nut N, can be raised by a force of 60 lb. applied at F. The screw has a lead of $\frac{1}{2}$ in. Assume that the friction loss is 40 per cent. Let $R = 20$ in.

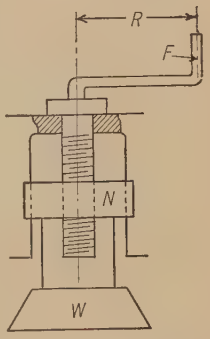

Fig. 238

Solution. While the screw makes one turn F moves over a distance $2\pi 20 = 125.66$ in. and N rises $\frac{1}{2}$ in.

Therefore, $F \times 125.66 \text{ in.} = W \times \frac{1}{2} \text{ in.}$

Since 40 per cent is lost in friction the net force is

$$.60 \times 60 = 36 \text{ lb.}$$

Therefore, $36 \times 125.66 = W \times \frac{1}{2}$ in.,

or $W = 9047.5$ lb.

The same result would be obtained by substituting directly in Eq. (63).

Example 42. In the jack-screw shown in Fig. 236, the lead of the screw is $\frac{1}{2}$ in. $R = 3$ ft., 6 in. The force exerted at K is 100 lb. To find the weight W which could be lifted if friction were neglected.

Solution. Equation (64) applies in this case in finding the speed ratio, but equation (64) will be very nearly correct.

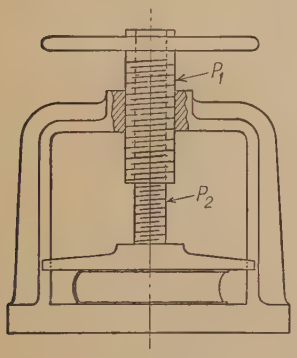

Fig. 239

$$\frac{\text{Speed of } W}{\text{Speed of } K} = \frac{\frac{1}{2} \text{ in.}}{2\pi 42} = \frac{100}{W}.$$

Therefore, $W = 2\pi 42 \times 100 \times 2 = 52{,}779.$

In any case such as this the loss by friction would be great and would have to be taken account of.

Example 43. In Fig. 239 $P_1 = \frac{3}{16}$ in. right hand; $P_2 = \frac{1}{8}$ in. right hand. To find how many turns of the hand wheel are required to lower the slide $\frac{1}{2}$ in., and to determine the direction the wheel must be turned.

Solution. Since the outer screw is right hand and has a lead of $\frac{3}{16}$ in. one turn of the wheel right-handed as seen from above will lower the outer screw $\frac{3}{16}$ in. At the same time, since the inner screw is also right-handed, this one turn of the wheel will draw the inner screw into the outer one $\frac{1}{8}$ in. so that the resultant downward motion of the slide for one turn of the wheel is $\frac{3}{16}$ in. $-\frac{1}{8}$ in. $= \frac{1}{16}$ in. Therefore, to lower it $\frac{1}{2}$ in. the wheel must be turned right-handed as seen from above as many times as $\frac{1}{16}$ is contained in $\frac{1}{2}$ or 8 times.

196. Rotation of Screw or Nut Caused by Axial Pressure. In the cases above considered the rotating force has been assumed to act on the screw or nut in a plane perpendicular to the axis of the screw. With a screw of large lead and relatively small diameter, so that the angle which the helix makes with the axis of the screw is small, a force acting in the direction of the axis may have a component in the direction to cause rotation which is great enough to overcome the frictional resistance and other resistances to turning and thus cause either the screw or the nut to turn. This principle is made use of in small automatic drills and screw-drivers, in which axial pressure on the handle causes the tool to turn. Such action is not possible unless the helix angle is small, and the rotative component of the force relatively large. It is well known, however, that constant jarring will cause nuts to work loose, hence the necessity for cotter pins or double nuts, one serving as a check for the other.

197. Screw Cutting. Screws are correctly cut in a lathe where the cylindrical blank is made to rotate uniformly on its axis, while a tool, having the same contour as the space between the threads, is made to move uniformly on guides in a path parallel to the axis of the screw, an amount equal to the lead for each rotation of the blank. The screw is completed by successive cuts, the tool being advanced nearer the axis for each cut until the proper size is obtained. A nut can be cut in the same way by using a tool of the proper shape and moving it away from the axis for successive cuts.

Screws are also cut with solid dies either by hand or power, and with proper dies and care good work will result. Nuts are generally threaded by means of "taps" which are made of cylindrical pieces of steel having a screw-thread cut upon them of the requisite pitch; grooves or flutes are made parallel to the axis to furnish cutting edges, the tap is tapered off at the end to allow it to enter the nut, and the threads are "backed off" to supply the necessary clearance. Before tapping, the nut must have a plain hole in it of a diameter a little greater than the root diameter of the screw which it is to fit.

Screws cut by open dies that are gradually closed in as the screw is being cut are not accurate, as the screw is begun on the outside of the cylinder by the part of the die which must eventually cut the bottom of the thread on a considerably smaller cylinder. Thus, as the angle of the helix is smaller the smaller the cylinder, the lead remaining the same, the die at first traces a groove having a lead due to the smaller angle of the helix at the bottom of the thread. As the die-plates are made to approach each other, they tend to bring back this helical groove to the standard lead; this strains the material of the threads, and finally produces a screw of a different lead than that of the die-plates.

198. Screw Cutting in a Lathe. In cutting a screw thread in a lathe, the stock on which the thread is being cut turns at a speed such that it will have a surface speed suitable for the cutting tool. While the work is making one turn, the tool must be fed along in a direction

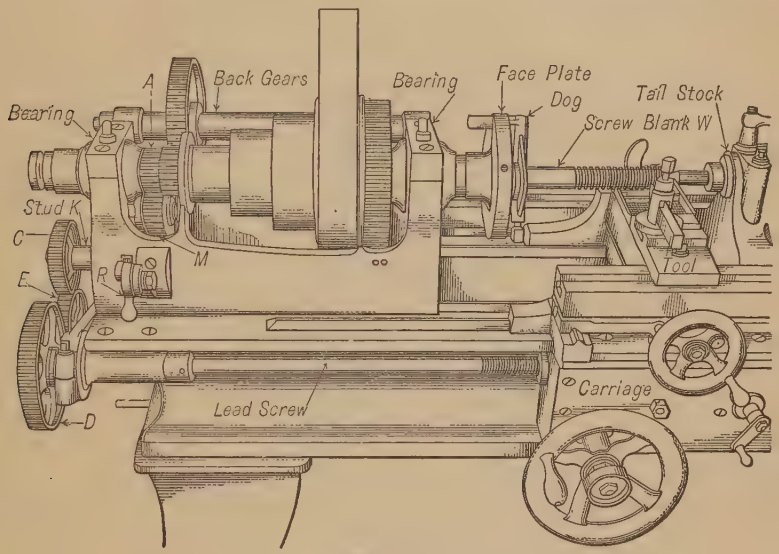

Fig. 240a

parallel to the axis of the work a distance equal to the lead of the thread which is being cut. Figs. 240a and 240b show one of the simplest methods of accomplishing this result. Fig. 240a is the front view of the lathe and Fig. 240b the end view. The gears are lettered alike in both views.

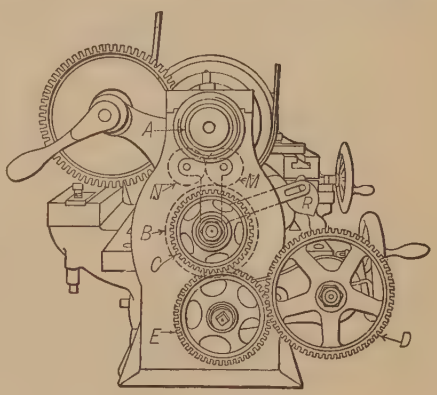

Fig. 240b

Many of the modern lathes use a much more elaborate system of gearing, but that shown in the figure serves to illustrate the principles and is easier to understand than the more complicated ones.

In Fig. 240a, *W* is the stock on which the thread is to be cut. This is clamped to the face plate by the dog so that both turn together. The face plate is fast to the spindle which is driven from the cone pulley either directly or through the back gears. On the opposite end of the

spindle is the gear A driving gear B on the stud K through one or two idle gears M and N according to the desired direction of rotation. Fast to the same stud, and, therefore, turning at the same speed as B, is the gear C. This gear drives D through an idle gear. D is fast to the lead screw which is embraced by a nut inside the carriage. The tool is supported on and moves along with the carriage.

Assume that the lead of the thread to be cut on the blank is $\frac{1}{n}$ part of an inch and that the lead of the thread on the lead screw is $\frac{1}{t}$ part of an inch. If the blank makes a turns in a unit of time, then the distance which the tool must move in that time must be $a \times \frac{1}{n}$; also if b represents the number of turns which the lead screw makes in the same unit of time, $b \times \frac{1}{t}$ must equal the distance the tool moves. Therefore,

$$a \times \frac{1}{n} = b \times \frac{1}{t}.$$

Therefore,

$$\frac{b}{a} = \frac{\frac{1}{n}}{\frac{1}{t}},$$

or

$$\frac{\textit{Angular speed of lead screw}}{\textit{Angular speed of blank}} = \frac{\textit{lead of thread which is being cut}}{\textit{lead of thread on lead screw}}. \quad (65)$$

Now from the laws governing wheel trains

$$\frac{\textit{Angular speed of lead screw}}{\textit{Angular speed of blank}} = \frac{\textit{teeth in } A}{\textit{teeth in } B} \times \frac{\textit{teeth in } C}{\textit{teeth in } D}.$$

Therefore,

$$\frac{\textit{Teeth in } A}{\textit{Teeth in } B} \times \frac{\textit{teeth in } C}{\textit{teeth in } D} = \frac{\textit{lead of thread which is being cut}}{\textit{lead of thread on lead screw}}. \quad (66)$$

In any particular lathe the teeth in gears A and B are known quantities and cannot be changed.

The lead of the thread on the lead screw is also known. The gears C and D can be changed to give the desired speed to the lead screw, the idler E being adjusted so as to make proper connection between them. If the thread on the lead screw and that being cut are both right hand or both left hand, the lead screw must turn in the same direction as the blank. If one thread is right hand and the other left hand, the lead screw and the blank must turn in opposite directions. This is adjusted by the idle gears M and N.

Example 44. In Figs. 240a and 240b, assume that the lead of the thread on the lead screw is $\frac{3}{8}$ in. left hand; gear A has 20 teeth; B, 30 teeth; C, 27 teeth, and D, 54 teeth. To find the lead of the thread which is being cut on the blank.

Solution. Substituting in Eq. (66),

$$\frac{20}{30} \times \frac{27}{54} = \frac{\text{lead of thread being cut}}{\frac{3}{8}}.$$

Solving this equation gives lead of thread which is being cut as $\frac{1}{8}$ in. That is, a screw of 8 threads per inch is being cut.

To determine whether a right-hand or a left-hand thread is being cut the directions may be followed through by putting on arrows. If this were done in the figure the arrows would indicate that the blank and the lead screw are turning in the same direction, therefore, since the lead screw has a left-hand thread the thread which is being cut is left hand. If the lever R were thrown up so as to bring both idle gears into use, the direction of the lead screw would be reversed and a right-hand thread would be produced.

Example 45. Referring still to Figs. 240a and 240b, assume that the lead screw and the gears A and B are the same as in Example 44. Let it be required to find the number of teeth in C and D to cut 20 threads per inch on the blank.

Solution. Substituting in Eq. (66),

$$\frac{20}{30} \times \frac{\text{Teeth in } C}{\text{Teeth in } D} = \frac{\frac{1}{20}}{\frac{3}{8}}.$$

Hence,

$$\frac{\text{Teeth in } C}{\text{Teeth in } D} = \frac{1}{20} \times \frac{8}{3} \times \frac{30}{20} = \frac{1}{5}.$$

Then any practical sized gears may be used at C and D provided D has five times as many teeth as C; as, for example, 100 teeth in D and 20 teeth in C.

199. Worm and Wheel.* Fig. 241 is a picture of a worm and wheel mechanism mounted on a frame so as to be used as a model. The worm is merely a screw while the wheel is a gear with teeth so shaped that they mesh properly into the spaces of the worm thread. The worm may be right hand or left hand and single or multiple threaded.

Just as a screw, when turned, moves the nut along, so the worm, when turned, pushes the teeth of the worm wheel along, causing the wheel to turn. One turn of the worm will move a point on the pitch circle of the wheel over an arc equal in length to the pitch or lead of the worm. Therefore, in order to cause the wheel to make a complete turn the worm must turn as many times as the lead is contained in the circumference of the pitch circle of the wheel.

Let P represent the lead of the worm and D the pitch diameter of the wheel.

Then

$$\frac{\text{Turns of worm}}{\text{Turns of wheel}} = \frac{\pi D}{P}, \tag{67}$$

or

$$\text{Turns of wheel} = \text{Turns of worm} \times \frac{P}{\pi D}. \tag{68}$$

* See also Chap. V.

Again, the action of the worm on the wheel may be considered similar to the action of a rack on a gear. One turn of a single-threaded worm is the same as sliding a rack along a distance equal to the circular pitch of the wheel, or turning the wheel through $\frac{1}{T}$ part of a turn, where T represents the number of teeth in the wheel. One turn of a double-

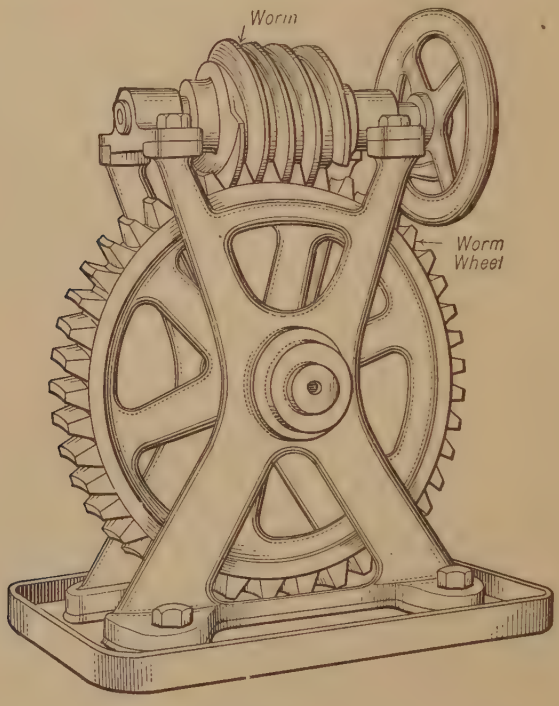

FIG. 241

threaded worm corresponds to moving a rack along a distance equal to twice the circular pitch of the wheel, or turning the wheel through $\frac{2}{T}$ part of a turn.

Therefore,

$$\textit{Turns of wheel} = \frac{1}{T} \times \textit{turns of single-threaded worm}, \tag{69}$$

$$\textit{Turns of wheel} = \frac{2}{T} \times \textit{turns of double-threaded worm}, \tag{70}$$

$$\textit{Turns of wheel} = \frac{3}{T} \times \textit{turns of triple-threaded worm}. \tag{71}$$

Or, to express the same idea in more general terms,

$$\frac{\text{Turns of wheel}}{\text{Turns of worm}} = \frac{\text{Number of threads in worm}}{\text{Number of teeth in wheel}}. \quad (72)$$

It will be noticed that the angular speed ratio of a worm and worm wheel as expressed in Eq. (72) is the same as for a pair of gears, considering the worm as a gear. In fact the worm and wheel do not differ essentially from helical gears, with shafts at right angles, and as has been stated in Chapter V it is not easy to determine where the line is drawn between helical gears and worm and wheel. Perhaps a general method of distinguishing between the two is as follows:

In helical gears each tooth on each gear is only a part of a helix of large lead, whereas in the worm and wheel the wheel teeth are short lengths of helices of very great lead while the worm itself is a gear of one, two or, at any rate, very few teeth, each of which winds around once or more times.

200. Examples of Worm and Wheel.

Example 46. In the worm and wheel mechanism shown in Fig. 242 let it be required to find the number of turns of the worm that would be necessary to turn the wheel 14 times.

Solution. Applying Eq. (67),

$$\frac{\text{Turns of worm}}{14} = \frac{\pi\, 10}{.628}.$$

Therefore $$\text{Turns of worm} = \frac{14\,\pi\,10}{.628} = 700 \text{ approximately.}$$

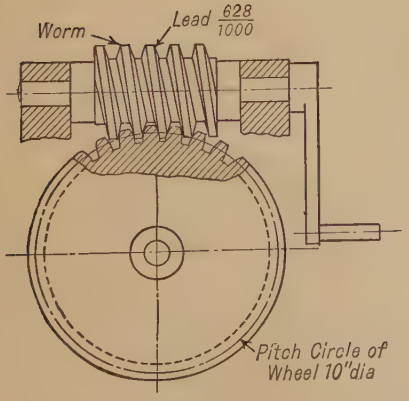

Fig. 242

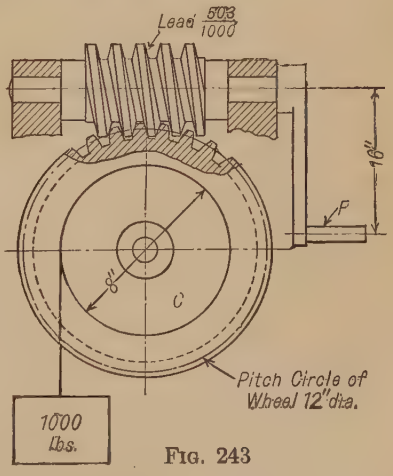

Fig. 243

Example 47. The cylinder C, Fig. 243, is keyed to the same shaft as the worm wheel. It is required to find the force F which would be necessary on the handle in order to raise the weight of 1000 lb. if friction is neglected.

Solution 1. First determine the ratio of the linear speeds of the weight and the point at which the force F is applied. If the worm is assumed to make one turn in a unit of time the handle will have a speed equal to the circumference of a circle whose radius is the distance from the axis of the worm to the center of the handle. Therefore, it would be $2\,\pi\,16$ in. $= 32\,\pi$ in. While the worm turns once the wheel will turn

$$\frac{\text{Lead}}{\text{Circumference of wheel pitch circle}}, \quad \text{or} \quad \frac{.503}{\pi\,12} \text{ turns.}$$

Since the cylinder C turns at the same angular speed as the worm wheel a point on its circumference will have a linear speed of $\frac{.503}{\pi\,12} \times \pi\,8 = .3353$ nearly.

Therefore, since the force is to the weight as the speed of the weight is to the speed of the point at which the force is applied,

$$\frac{F}{1000} = \frac{.3353}{32\,\pi}, \quad \text{or} \quad F = 3\tfrac{1}{3} \text{ lb.}$$

Solution 2. This problem might have been solved by a somewhat shorter method, as follows: Assuming the worm single-threaded, the wheel must have as many teeth as the lead is contained in the circumference of the pitch circle, or $\frac{\pi\,12}{.503} = 75$ teeth. Therefore, one turn of the worm will cause the wheel and the cylinder C to make $\frac{1}{75}$ of a turn (see Eq. 69). Then, if the radius of the crank were equal to the radius of C, the force F would be $\frac{1}{75}$ of the weight W. But since the radius of the crank is 4 times that of C the force F will be $\frac{1}{4} \times \frac{1}{75}$ of W or $\frac{1}{300}$.

Therefore, $F = \frac{1000}{300}$ or $3\frac{1}{3}$ lbs.

The same result would be obtained if the worm were not single-threaded, provided the lead is the same. For example, assume the worm double-threaded, then the wheel would have $2 \times \frac{\pi\,12}{.503}$, or 150 teeth and one turn of the worm would cause the wheel to make $\frac{2}{150}$ of a turn (see Eq. 70), which equals $\frac{1}{75}$ as before.

CHAPTER IX

CAMS

201. A cam is a plate, cylinder, or other solid having a curved outline or a curved groove, which rotates about a fixed axis and, by its rotation, imparts motion to a piece in contact with it, known as the follower.

This motion may be transmitted by sliding contact; but where there is much force transmitted, it is often accomplished by rolling contact.

If the action of the piece is intermittent, it is sometimes called a **wiper**; that is, a cam, in most places, is continuous in its action, while a wiper is always intermittent: but a wiper is often called a cam notwithstanding.

Fig. 244 is a drawing of a cam known as a *plate cam*, and Fig. 245 a drawing of a cylinder containing an irregular groove and known as a *cylindrical cam*.

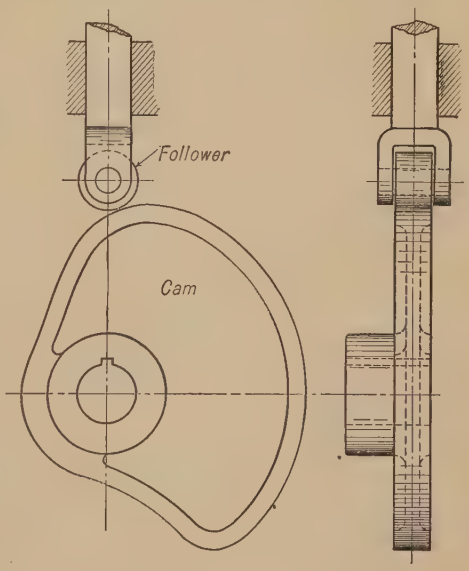

FIG. 244

Very many machines, particularly automatic machines, depend largely upon cams, properly designed and properly timed, to give motion to the various parts.

Usually a cam is designed for the special purpose for which it is to be used. In most cases which occur in practice the condition to be fulfilled in designing a cam does not directly involve the speed ratio, but assigns a certain series of definite positions which the follower is to assume while the driver occupies a corresponding series of definite positions.

The relations between the successive positions of the driver and follower in a cam motion may be represented by means of a diagram whose abscissæ are linear distances arbitrarily chosen to represent angu-

lar motion of the cam and whose ordinates are the corresponding displacements of the follower from its initial position. This is illustrated in Fig. 246, where the line *Oabc* represents the motion given by the cam.

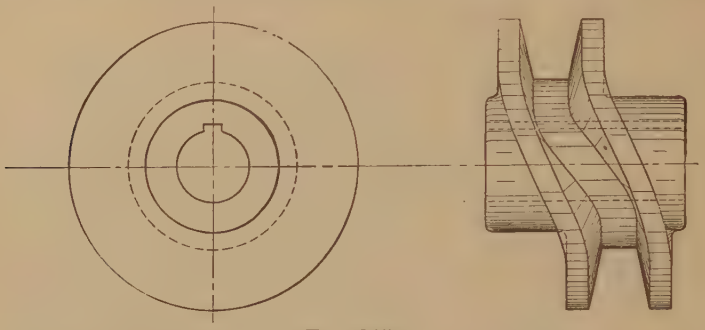

Fig. 245

The perpendicular distance of any point in the line from the axis *OY* represents the angular motion of the driver, while the perpendicular distance of the point from *OX* represents the corresponding movement of the follower, from some point considered as a starting point. Thus the line of motion *Oabc* indicates that from the position 0 to 4 of the driver, the follower had no motion; from the position 4 to 12 of the driver, the follower had a uniform upward motion *b*12; and from posi-

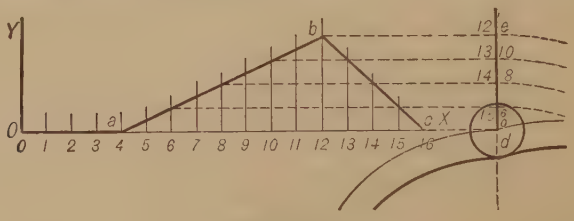

Fig. 246

tion 12 to 16 of the driver, the follower had a uniform downward motion *b*12, thus bringing it again to its starting-point.

201A. Diagrams for Cams giving Rapid Movements. It is very often the case that a cam is required to give a definite motion in a short interval of time, the nature of the motion not being fixed. The form of the diagram for such a motion will now be discussed.

In the diagram shown in connection with Fig. 246 the follower had two uniform motions, and if the cam be made to revolve quickly, quite a shock will occur at each of the points where the motion changes, as *a*, *b*, and *c*; to obviate this the form of the diagram can be changed, provided it is allowable to change the nature of the motion.

Suppose a cam is to raise a body rapidly from e to f (Fig. 246a), the nature of the motion to be such that the shock shall be as light as possible.

For the straight line Oa the case is one of a uniform motion (as in Fig. 246), the body being raised from e to f in an interval proportional to ob; here the motion changes suddenly at O and a accompanied by a perceptible shock. The line $Ocda$ would be an improvement, the follower not requiring so great an impulse at the start or near the end of the motion each being much more gradual than before.

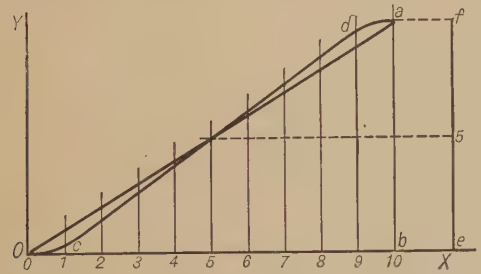

Fig. 246a

The body may be made to move with a *harmonic motion*, the diagram for which would be drawn as follows (Fig. 246b):

Draw the semicircle $e5f$ on ef as a diameter; divide the time line Oh into a convenient number of equal parts (in this case ten), and then divide the semicircle into the same number of equal parts; through the divisions of the semicircle draw horizontal lines intersecting the vertical lines drawn through the corresponding points of division of the time line Oh, thus obtaining points, as $a, b, c,$ etc. A smooth curve drawn through these points gives the full curve $Oabcd \ldots n$. Here the body or follower receives a velocity increasing from zero at the start to a maximum at the middle of its path, when it is again gradually diminished to zero at f, the end of its path.

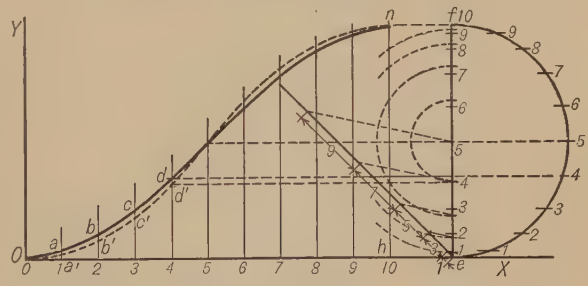

Fig. 246b

This form of diagram gives very good results, and is satisfactory in many of its practical applications.

A body dropped from the hand has no initial velocity at the start, but has a uniformly increasing velocity, under the action of gravity, until it reaches the ground; similarly, if the body is thrown upward with the velocity it had on striking the ground, it will come to rest at a height equal to that from which it was dropped, and its upward motion is the

reverse of the downward one, that is, a uniformly retarded motion. (See § 27.)

In designing a cam for rapid movement the motion of the follower should obey the same law of gravity, and have a uniformly accelerated motion until the middle of its path is reached, then a uniformly retarded motion to the end of its path.

A body free to fall descends through spaces, during successive units of time, proportional to the odd numbers 1, 3, 5, 7, 9, etc., and the total space passed over equals the sum of these spaces.

To develop a line of action according to this law upon the same time line *Oh*, and with the same motion *ef*, as before, proceed as follows:

Divide the time line *Oh* into any *even* number of equal parts, as ten; then divide the line of motion *ef* into successive spaces proportional to the numbers 1, 3, 5, 7, 9, 9, 7, 5, 3, 1, and draw horizontal lines through the ends of these spaces, obtaining the intersections a', b', c', etc., with the vertical lines through the corresponding time divisions 1, 2, 3, etc.; a smooth curve, shown dotted in the figure, drawn through these points, will give the cam diagram.

202. Plate Cams. A plate cam imparts motion to a follower guided so that it is constrained to move in a plane which is perpendicular to the axis about which the cam rotates; that is, in a plane coincident with or parallel to the plane in which the cam itself lies. The character of the motion given to the follower depends upon the shape of the cam. The follower may move continuously or intermittently; it may move with uniform speed or variable speed; or it may have uniform speed part of the time and variable speed part of the time. A knowledge of the various types of plate cams, and an idea of the manner of attacking the problem of designing a cam for any specific purpose, can best be obtained by studying a number of examples.

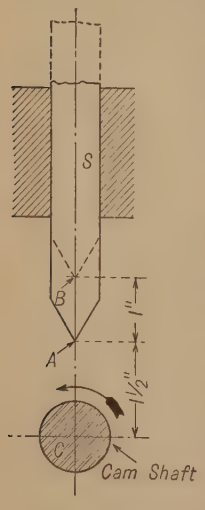

FIG. 247

Example 48. A cam is to be keyed to the cam shaft (Fig. 247), which turns as indicated. The shape of the cam is to be such that the point of the slider *S* will be raised with uniform motion from *A* to *B* while the cam makes one-half a turn, and lowered again to the original position during the second half-turn of the cam. The cam shaft turns at uniform speed.

Solution. (Fig. 248.) Draw a circle through *A* with *C* as a center. Since the follower is to rise from *A* to *B* while the cam makes one-half a turn (or turns through 180°), and since the cam shaft turns at uniform speed, divide one-half of the circle (*AVW*) into any number of *equal* angles by the lines *Ca*, *Cb*, *Cd*, and *Ce*. Four divisions are made in the illustration, although for accurate work a greater number

would be desirable. The divisions are made on the side which is turning upward toward the follower, that is, back on the side *from* which the arrow is pointing. Now, divide the distance AB into as many parts as there are divisions in the angle AVW. Since the follower is to rise from A to B with uniform motion, the divisions of AB will be equal. That is, A to 1 = 1 to 2 = 2 to 3 = 3 to B. When the cam has

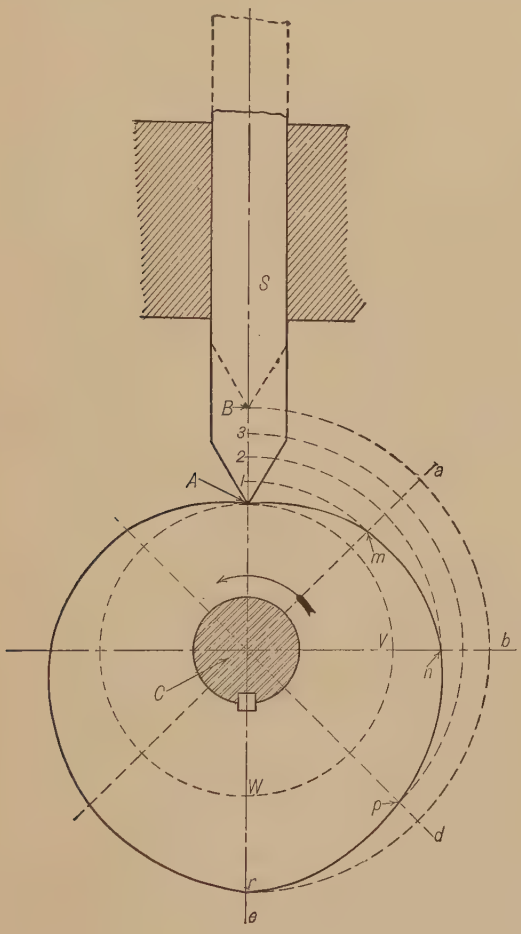

FIG. 248

made one-fourth of a half revolution, the line Ca will be vertical. A point m on this line, found by swinging an arc through 1 with center C, will be the point on the cam which will be at the height $C1$ above the center when the cam has made one-fourth of one-half revolution. Similarly, n will be the point on the cam which will be at 2 when the cam has turned one-half of the half revolution. p and r are found in the same way, by drawing arcs through 3 and B cutting the lines Cd and Ce, respectively.

A smooth curve drawn through the points A, m, n, p, and r will be the correct outline for that portion of the cam which will raise the follower point from A to B as specified. Since the follower is to be lowered from B to A, also, with uniform motion during the remaining half turn of the cam, the other half of the cam outline will be a duplicate of that already found.

Example 49. Data the same as for Example 48, except that the follower, instead of having a point shaped as in that case, has a roller, as shown in Fig. 249, on which the cam acts. The construction is shown in Fig. 250. It is necessary first to find the outline of the cam for a follower like that in Fig. 248, the point of the follower being assumed to be at the center A of the roller, Fig. 250. The construction of this curve is exactly the same as explained for Fig. 248 and is lettered the same in Fig. 250, the curve itself being drawn as a dot and dash line. This is called the *pitch line* of the cam. The next step is to set a compass to a radius equal to the radius of the roller and, with

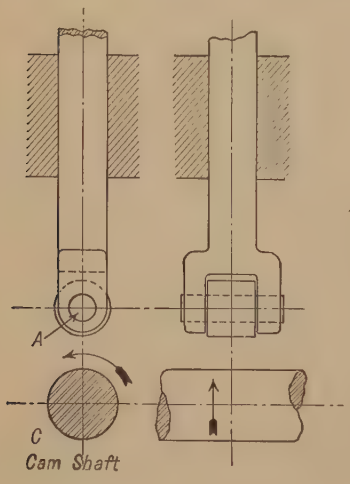

Fig. 249

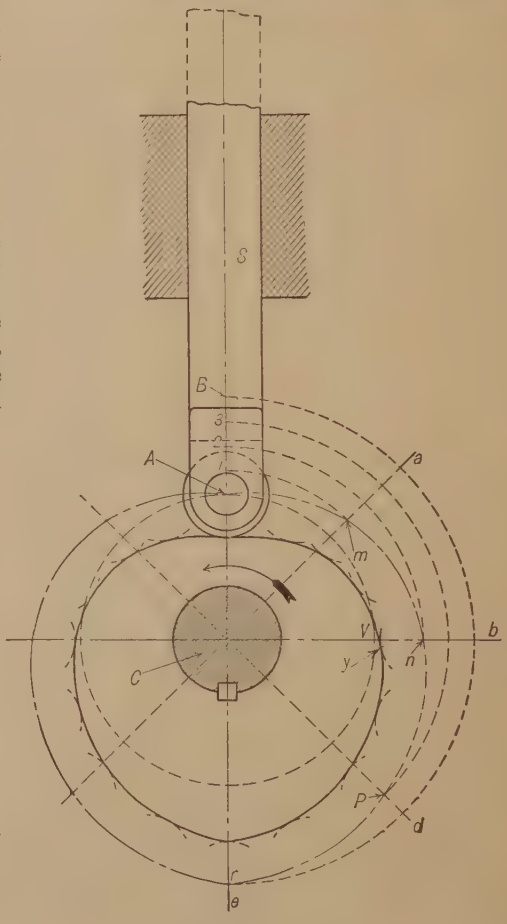

Fig. 250

centers at frequent intervals on the pitch line, draw arcs as shown dotted. The true cam outline is a smooth curve drawn *tangent* to these arcs. It should be noted that the point of tangency will not necessarily lie on the line joining the center of the arc to the center of the cam. For instance, consider the arc drawn with n as a center. The cam curve happens to strike this arc at y, not at the point where the arc cuts the line Cb.

This condition often prevents the cam which acts on a roller or similar follower from giving exactly the same motion as would be obtained from the "pitch line" cam acting on a pointed follower. This is likely to be true at convex places where the motion changes suddenly.

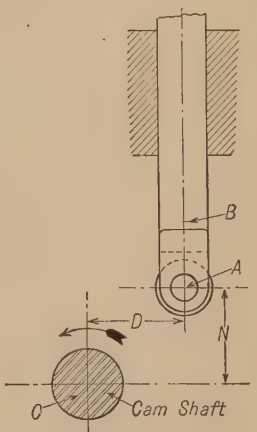

FIG. 251

Example 50. Given a follower with a roller as shown in Fig. 251. The lowest position of the center of the roller is a distance N above the center of the cam shaft, and the line AB along which the center of the roller is guided is a distance D to the right of a vertical line through C. That is, the center of the cam shaft is offset a distance D to the left of the line of motion of the center of the follower. To draw the outline of a plate cam which, by turning as shown by the arrow, shall raise the center of the roller from A to B with uniform motion while the cam makes one half a turn, then lower it again to A during the second half revolution of the cam.

Solution. Fig. 252 shows the solution of this problem. Starting with C, locate the center A by measuring a distance D to the right of C and a distance N above C. Draw a line Ck through C and A. Since the upward motion is to take place during one-half turn of the cam, measure back 180° from Ck and draw Ce (that is, $kACe$ is a straight line). Divide the angle kCe into any

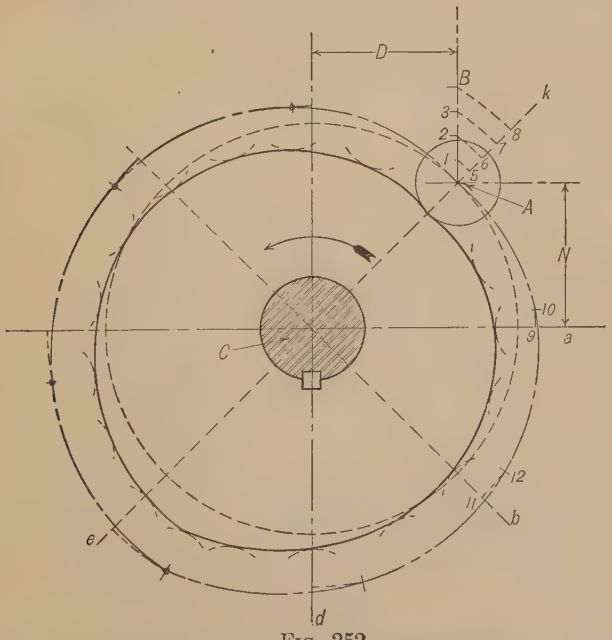

FIG. 252

convenient number of equal parts as before (in this case four) by the lines Ca, Cb, Cd. Divide AB into the same number of equal parts, since the follower is to rise

with uniform speed. From C as a center swing an arc through 1 cutting Ck at 5. Cut Ca with the same arc at 9. Make the length 9–10 equal to 5–1. Then 10 is one point on the pitch line of the cam. In the same way point 12 is found by making arc 11–12 equal to arc 6–2, and, similarly, all the way around. The true cam outline is found as before by drawing arcs with radius equal to the radii of the roller, and with centers on the pitch line, and then drawing a smooth curve tangent to these arcs.

Example 51. Fig. 253 shows the method of laying out a cam to move a follower from A to B with uniform motion during one-quarter turn of the cam, hold it at B

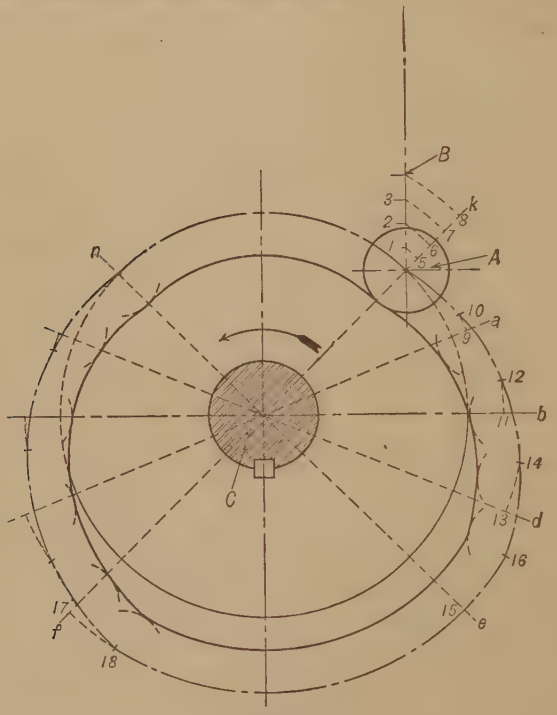

FIG. 253

during one-quarter turn, lower it again to A during one-quarter turn, and allow it to remain at A during the last quarter turn; the cam to turn in the direction of the arrow.

Solution. Starting with C and A as in the preceding figure, draw the line kAC. It is convenient, for the purpose of dividing up the angles, to draw a circle through A with C as a center. With CAk as a starting or reference line divide the circle into four equal parts by the lines Ce, Cf and Cn. The angle kCe is the angle through which the cam turns while the follower is being raised. Divide this angle into equal parts, and find points on the cam pitch line as described in Example 50, the only difference here being that the angles kCa, kCb, etc., are smaller. Point 16 is the last point thus found. Since the follower is to remain at rest at B during the next quarter turn of the cam, the pitch line of the part of the cam which holds it up there will be an arc of a circle drawn through 16 with C as a center. This part of the cam will

extend from 16 to 18, the point 18 being found by extending the circle to cut Cf at 17 and making the distance 17–18 equal to 15–16. The construction for completing the pitch line is exactly similar, and the cam curve proper is obtained as described in the previous examples.

Example 52. Fig. 254 is a cam which raises the center of the roller from A to B with harmonic motion during one-third of a turn, allows it to drop to its original position instantly, and holds it there during the remaining two-thirds of a turn. The angle kCf, through which the cam turns to raise the roller, is laid off (120°) and divided into an *even* number of *equal* parts. Since the roller is to rise with harmonic motion, a semicircle is drawn with AB as a diameter, and the circumference of this semicircle is divided into as many equal parts as there are divisions in the angle kCf.

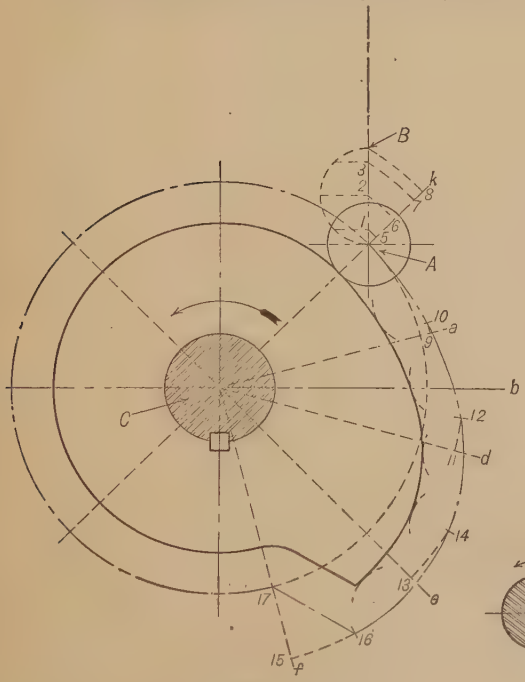

FIG. 254

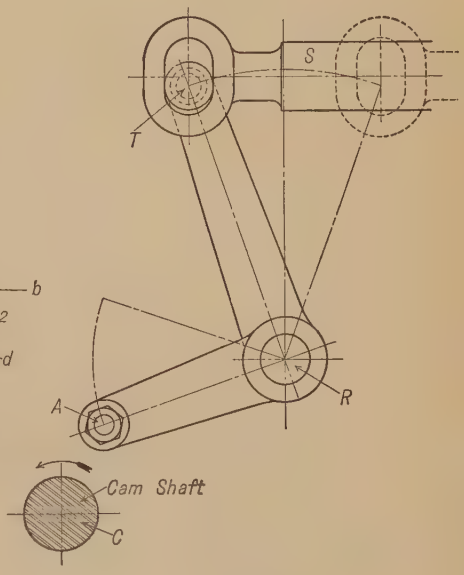

FIG. 255

From the points of division on this semicircle perpendiculars are drawn to the line AB, meeting it at points 1, 2, 3. These points are the points of division of AB to be used in finding the pitch line of the cam, which is found as previously described. The last point on the part which raises the follower is 16. Since the follower is to drop instantly, draw a straight line from 16 to 17, the point where an arc through A cuts Cf. The remainder of the pitch line is a circle about C through 17 around to A.

Example 53. In Fig. 255 a cam is to be placed on the shaft at C to act on a roller centered at A on the rocker ART. Another roller centered at T on the rocker fits a slot in the slider S. The cam is to be of such shape that, by turning as shown by the arrow, it will move the slider with harmonic motion to the position shown

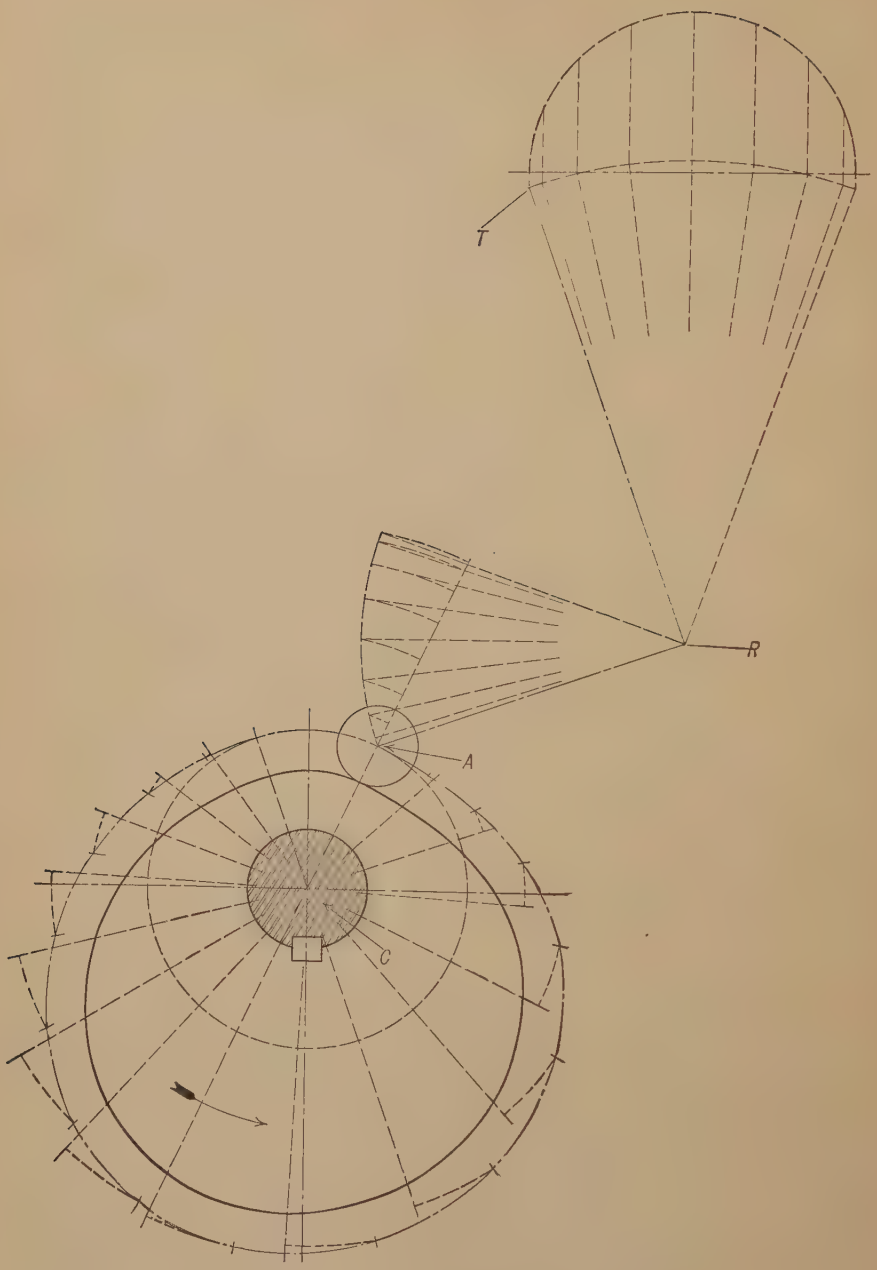

FIG. 256

dotted during one-half turn of the cam in the direction indicated, allow it to return to its original position, with harmonic motion, during the next $\frac{7}{8}$ of a turn and allow it to remain at rest during the remaining $\frac{1}{8}$ of a turn. Fig. 256 shows the construction.

Example 54. In Fig. 257 let it be required to design a cam to be placed on shaft O to raise slider A to A_1 during $\frac{1}{3}$ of a turn of the cam, allow it to drop at once to its original position and remain there during the rest of the turn of cam, the character of the motion of A to be unimportant except that the starting and stopping

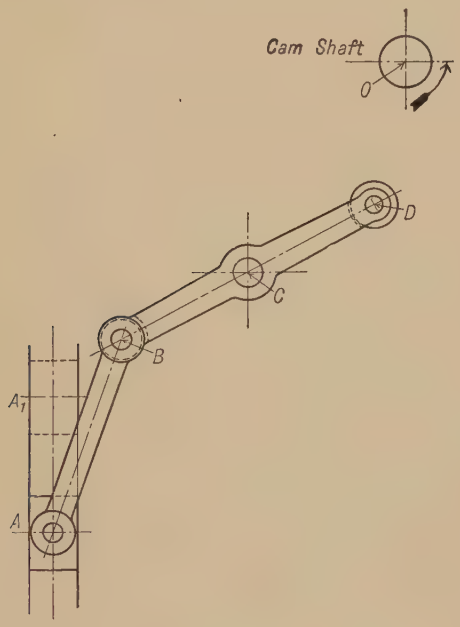

FIG. 257

shall be gradual. The cam is to act on a roller on the rocker BCD, the rocker being connected to the slider by the link BA.

Solution. Fig. 258. First draw the motion diagram assuming uniform motion for A. This is shown by the dotted line ta_8. Next substitute for this line the line shown full, the greater part of which is straight, having more slope than the original line and connected to points t and a_8 by curves drawn tangent to the sloping line and tangent to horizontal lines at t and a_8.

Subdivide into equal parts the distance tt_8, which represents the $\frac{1}{3}$ turn during which the motion of the slider takes place, erect ordinates at these points cutting the motion plot at points a_1, a_2 etc., and project these points on to the path of A getting A_1, A_2, etc. From A_1, A_2, etc., with radius AB cut an arc drawn about C with radius CB, getting B_1, B_2, etc. From these points draw lines through C cutting the arc of radius CD at D_1, D_2, etc. The cam is found from these points as in previous examples.

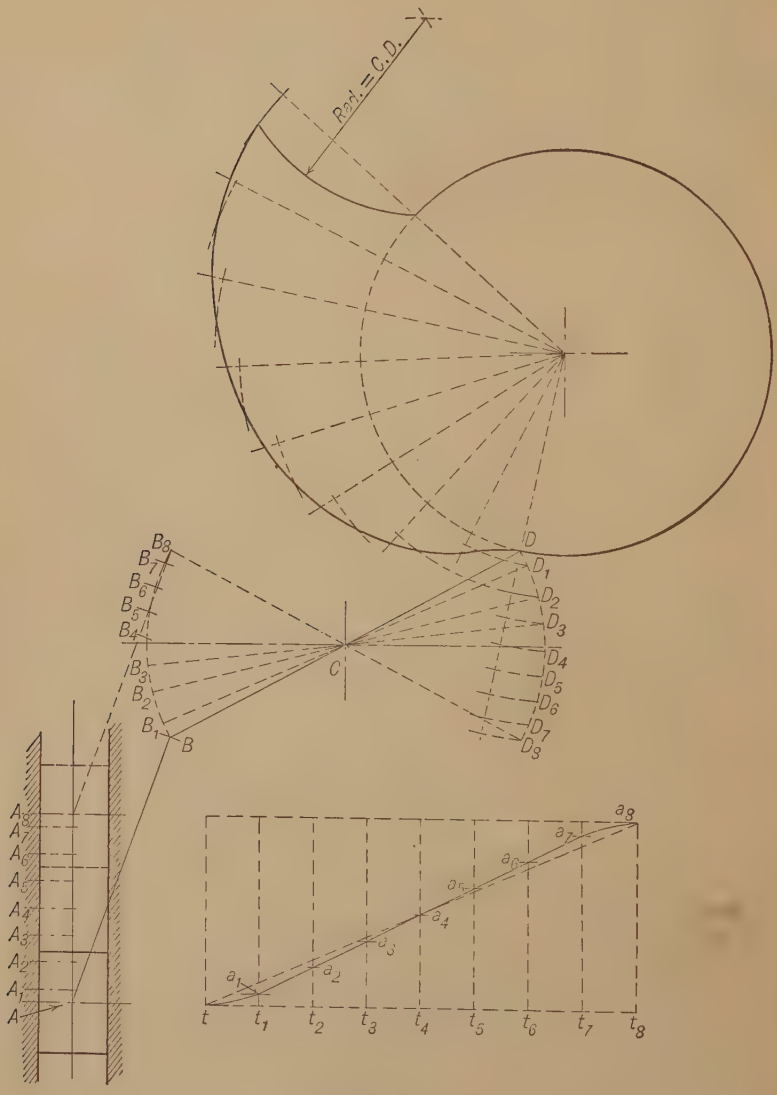
Rad. = C.D.
D
D_1
D_2
D_3
D_4
D_5
D_6
D_7
D_8
C
B_8
B_7
B_6
B_5
B_4
B_3
B_2
B_1
B
A_8
A_7
A_6
A_5
A_4
A_3
A_2
A_1
A
a_1
a_2
a_3
a_4
a_5
a_6
a_7
a_8
t
t_1
t_2
t_3
t_4
t_5
t_6
t_7
t_8

FIG. 258

203. Positive Motion Plate Cams. It will be noticed that in each of the cams which have been discussed, the follower must be held in contact with the surface of the cam by some external force such as gravity, or a spring. The cam can only force the follower away from the cam shaft, while some outside force must bring it back. In case it is desired to make the cam positive in its action in either direction without depending upon external force, the cam must be so constructed as to act on both sides of the follower's roller, or there must be two rollers, one on either side of the cam. Fig. 259 shows a cam designed

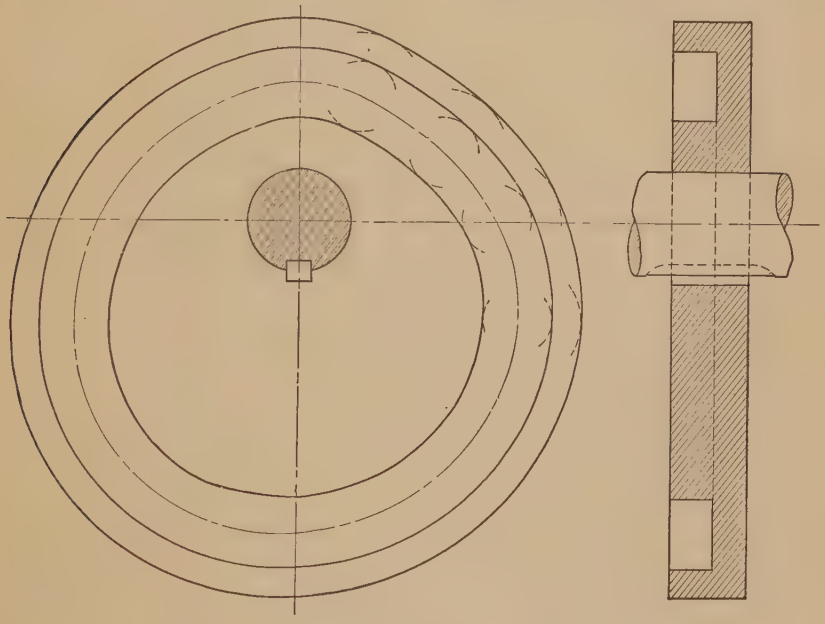

FIG. 259

to give the same motion to the same follower as in Fig. 256. In Fig. 259, however, the pitch line of the cam is made the center line of a groove of a width equal to the roller diameter, thus enabling the cam to move the roller in either direction.

Fig. 260 shows another style of positive motion cam. The follower consists of a framework carrying two rollers, one, roller C, resting on cam A, which is designed so as to give whatever motion is desired for the follower. The other, roller D, rests on cam B, which is designed to be in contact with roller D, the position of the latter depending in turn upon the position of the roller C. It would be possible to have both rollers touching the same cam, but in that case the movement of the

follower could only be chosen for one-half a turn of the cam, the other half being determined by the shape of the cam necessary to be in contact with both rollers.

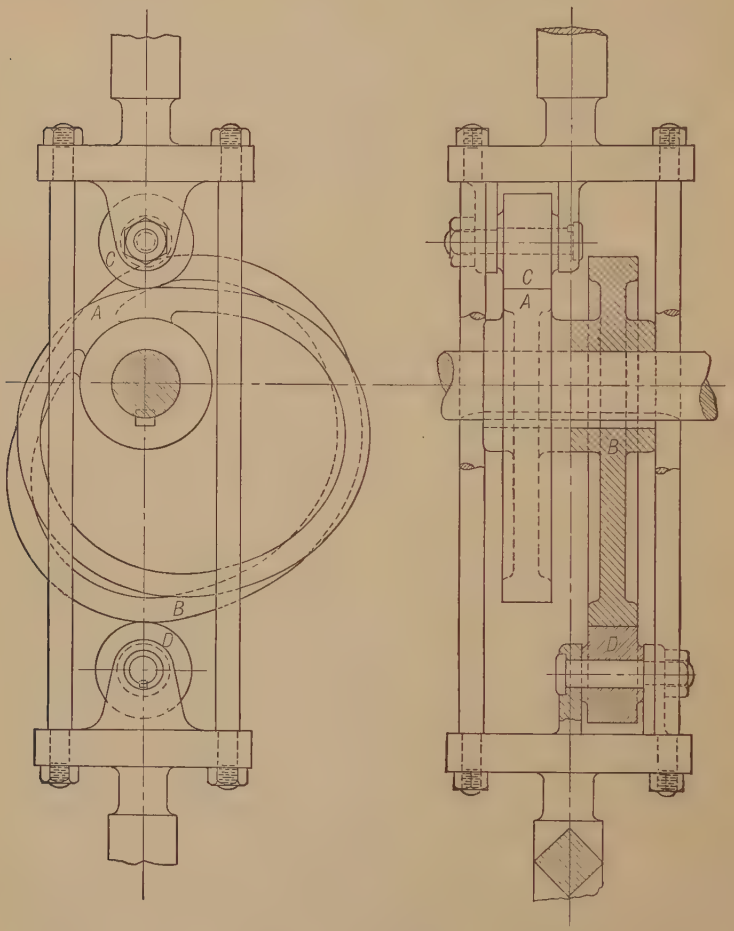

FIG. 260

204. Plate Cam with Flat Follower. — Example 55. The follower for the cam shown in Fig. 261 has a flat plate at its end instead of a roller. The cam is so designed that, when it turns right-handed, the follower is raised with harmonic motion while the cam makes one-third of a turn, then remains at rest during the next third of a turn of the cam and is lowered with harmonic motion during the remaining third of a turn.

If the center line of the guides in which the follower moves does not pass through the center of the cam, the shape of the cam is not affected, provided the direction is the same.

Solution. The method of construction is as follows: Assuming that the follower is shown in its lowest position, measure up along a vertical line passing through the center of the cam the distance *o*8 which the follower is to move. Divide this into any even number of harmonic divisions, eight being used in the drawing. Lay back the angle *oEm* equal to the angle through which the cam turns while the follower is being lifted. Divide *oEm* into as many equal angles as there are harmonic divisions in the line *o*8. Through point 1 swing an arc with *E* as a center cutting the first radial line at *w*; through *w* draw a line perpendicular to *Ew*. Through 2 draw

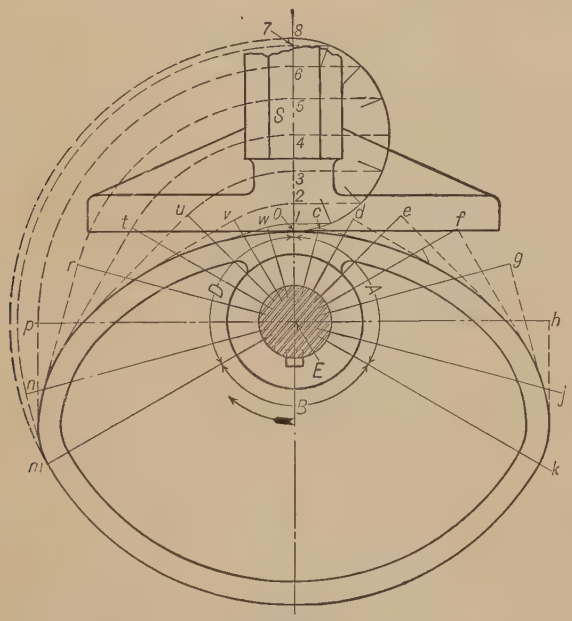

Fig. 261

an arc cutting the second radial line at *v* and draw through *v* a line perpendicular to *Ev*. In a similar way draw perpendiculars to *Eu*, *Et*, *Er*, *Ep*, *En*, and *Em*. A smooth curve tangent to all of these perpendiculars will be the outline of that portion of the cam which raises the follower.

Since the follower is to remain at rest while the cam turns through the next 120° the outline between the line *Em* and the line *Ek* 120° away from *Em* will be an arc of a circle through *m* with *E* as a center.

The outline of the portion of the cam which lowers the follower is found in a manner similar to that described for raising it.

If the foot of the follower made an angle θ with the center line of its path, θ being other than 90°, the construction lines at *c*, *d*, *e*, *f*, etc., instead of being drawn perpendicular to *Ec*, *Ed*, *Ee*, *Ef*, etc., would be drawn making an angle θ with these lines.

205. Plate Cam with Flat Rocker. — Example 56. The cam in Fig. 262 actuates the follower S through the rocker R which is pivoted at P. S slides in guides, and remains still while the cam makes a quarter turn right-handed, then rises to the upper dotted position with harmonic motion during a quarter turn of the cam. During the next

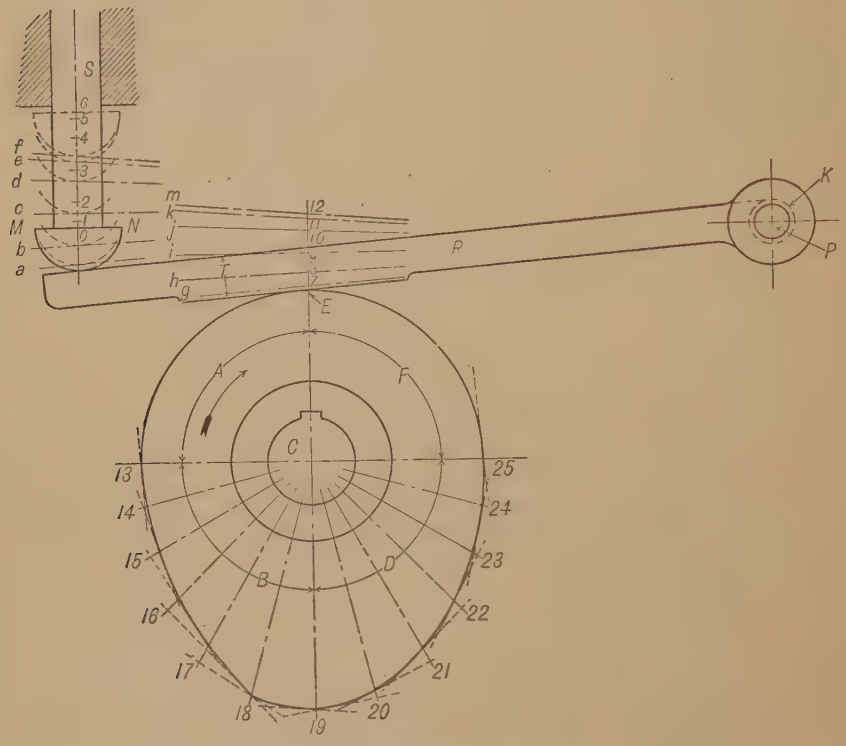

Fig. 262

quarter turn the follower drops with harmonic motion to its original position, and remains at rest during the last quarter turn. The foot of the follower is a semicircle with center at o, resting on the upper flat surface of the rocker.

To find the cam outline, first divide the distance $o6$ into harmonic spaces, six being used in this case. These points of divisions are the successive positions of the center of the semicircle. Draw arcs of the circle with each of the points, 1, 2, 3, 4, 5, 6, as centers. Draw the dotted circle K tangent to the upper surface of the rocker produced. Next, draw the lines a, b, c, d, e, and f tangent to circle K and to the arcs drawn at 1, 2, 3, 4, 5, and 6 respectively. Parallel to, and at a distance T from lines a, b, c, etc., draw lines g, h, i, j, etc., cutting the vertical line through the cam center C at 7, 8, 9, 10, 11, and 12.

Since the follower is to remain at rest during a quarter turn of the cam, the outline of the cam over the angle A is an arc of a circle with radius CE.

Since the upward movement takes place during a quarter turn, or 90°, lay off angle B equal to 90° and divide it into as many equal angles as there are harmonic divisions in $o6$. Lay off $C14$ equal to $C7$ and through point 14 draw a line making the same angle with $C14$ that line g makes with CE. Draw similar lines through each of the other radial lines $C15$, $C16$, $C17$, $C18$, and $C19$. The cam outline will be a smooth curve tangent to all the lines which have been thus drawn.

A similar construction is used for finding the curve for the part of the cam which lowers the follower. The last part of the cam, over angle F, will be a circular arc to give the period of rest.

206. Cylindrical Cams. — Example 57. The general appearance of a cylindrical cam has already been shown (see Fig. 245.) Fig. 263 gives dimensions for the hub and groove for a cylindrical cam which is to hold a follower still for one-eighth turn of the cam, move it 2 in. to the right in a line parallel to the axis of the cam, with uniformly accelerated and uniformly retarded motion (see § 201A) while the cam makes three-eighths turn, hold it still for one-eighth turn, and return it to its original position with similar motion in three-eighths turn.

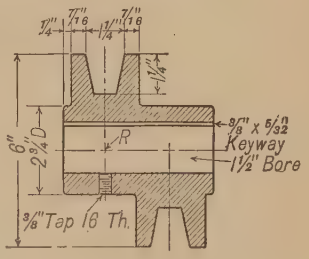

Fig. 263

Solution. The solution of this problem is shown in Fig. 264. The upper left-hand view is an end view of the cam, the upper right-hand view is a side elevation of the cam.

To make the drawing, proceed as follows:

Locate the center line XX'. On the line XX' choose the point C at any convenient place and draw the circle K whose radius is equal to the outside radius of the cylinder. Also draw the dotted circle P with the radius equal to the outside radius minus the depth of the groove. Draw the vertical center line YY'. Lay back the angle YCB equal to $\frac{1}{8}$ of 360°, that is, 45°. This is the angle through which the cam will turn before the follower starts to move. Since the movement of the follower is to take place during the next three-eighths of a turn, the cam will turn through the angle BCY' to give the motion to the follower. Since the follower is to remain at rest during the next one-eighth turn, the angle $Y'CT$ equal to 45° will next be drawn, and the remaining angle TCY will be the angle through which the cam will turn to move the follower back to its original position. Now, draw the center line MN at any convenient distance on the right of the figure already drawn, and locate the point E on this line at a distance from XX' equal to the outside radius of the cylinder. On a horizontal line drawn through E locate the points F and G, each at a distance from E equal to the radius of the roller on which the cam is to act. Draw HJ parallel to FG at a distance from it equal to the depth of the groove. Through F and G draw lines to the point L where MN intersects the axis XX'. That portion of the line HJ intersected between FL and GL will be the

width of the groove at the bottom. Before it is possible to proceed further in the construction of this side elevation of the cam, it is necessary to make a development of its outer surface. Draw the line $M'N'$ equal in length to the circumference of the cylinder.

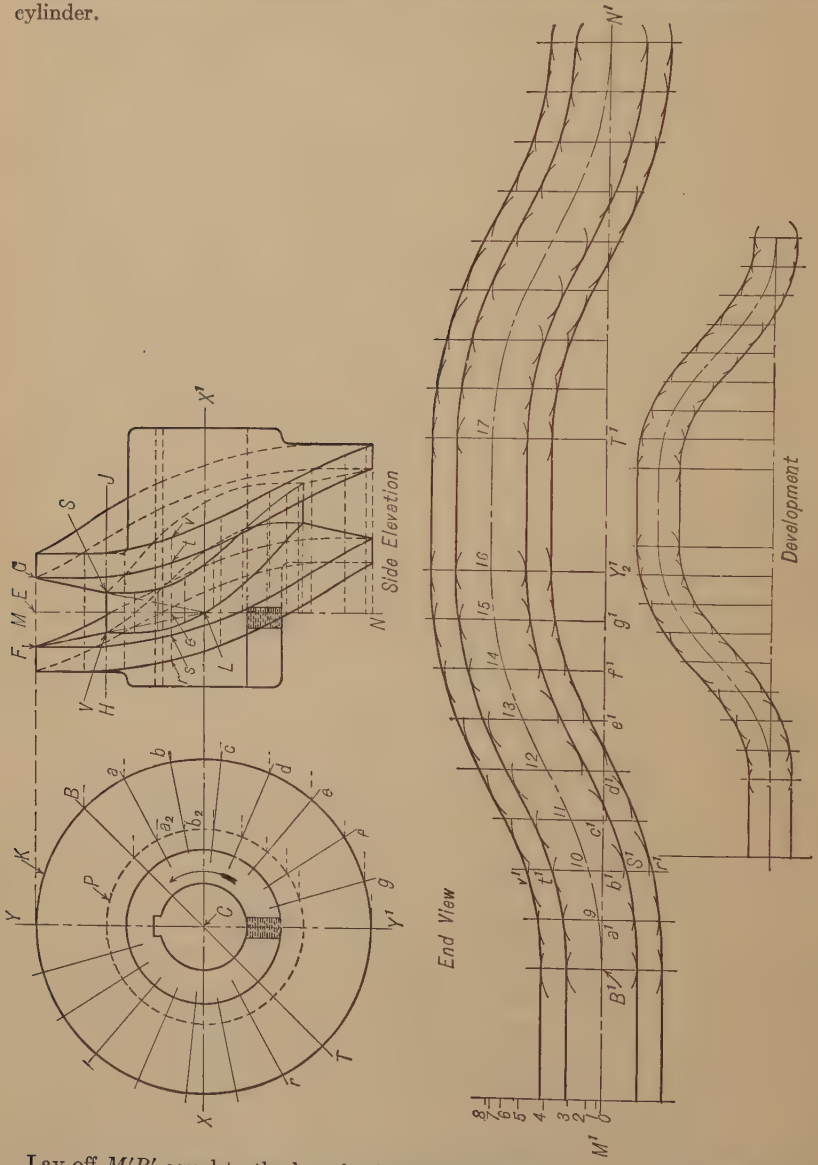

FIG. 264

Lay off $M'B'$ equal to the length of the arc YB and $B'Y'_2$ equal to the length of the arc BY'. Divide $B'Y'_2$ into any even number of equal parts, in this case eight, and letter points of division a', b', c', d', e', f', and g'. Through the points thus found draw vertical lines. On the vertical line through M' lay off $M'8$ equal to

the distance through which the follower is to move, and divide $M'8$ into "gravity" divisions (see § 201A), using as many divisions as there are equal divisions in $B'Y'_2$. Mark the points thus found 1, 2, 3, 4, 5, 6, 7. From 1 project across to the vertical through a'. From 2 project to the vertical through b', and so on, thus getting the points 9, 10, 11, 12, 13, 14, 15, and 16. A smooth curve drawn through these points will be the development of the center line of that portion of the cam groove which moves the follower to the right. Make Y'_2T' equal to the length of the arc $Y'T$. The development of the center line of the groove between the verticals at Y'_2 and T' is a horizontal straight line. Since the return motion of the follower is a duplicate of the forward motion, the curve $17N'$, being a duplicate of the curve $B'16$, will be the development of the center line of that portion of the cam groove which moves the follower back to its original position.

The above construction gives a development of the center line of the groove on the outer surface of the cylinder. The lines forming the development of the sides of the groove are smooth curves drawn tangent to arcs, swung about a series of centers along the line $M'B'$ 16 17 N' with radii equal to the radius of the large end of the roller as shown in the drawing. Similar curves drawn tangent to arcs swung about the same centers with a radius equal to the radius of the large end of the roller plus the thickness of the flange forming the sides of the groove, will be the development of the outer edges of these flanges.

The development of the corners of the bottom of the groove is constructed in the same way, except that the length of the development is less, because it is a development of a cylinder of smaller radius.

The projections (on the side elevation) of the curves which have just been developed are drawn by finding the projections corresponding to points r', s', t', v', where these curves cut the vertical line, it being borne in mind that the vertical lines on the development really represent the developed positions of elements of the cylinder, drawn through points a, b, c, etc., which are found by dividing the arcs BY' and TY into divisions equal to the divisions in $B'Y'_2$ and $T'N'$. The construction for the points r', s', t', and v' only will be followed through as the construction for all other points will be exactly similar. Through b on the end view draw an element of the cylinder across the side elevation. From e, where this element intersects MN, lay off et equal to $b't'$, ev equal to $b'v'$, to the right of MN since t' and v' are above $M'N'$, and es equal to $b's'$ and er equal to $b'r'$, to the left since s' and r' are below $M'N'$. The points r, s, t, v, are the projections of points corresponding to r', s', t', v'. Projections of all other points where the curves intersect the verticals on the development are found in exactly the same way, and smooth curves drawn through the points thus found will be the projections of the corners of the groove, and of the flange enclosing the groove. The projections of the corners of the bottom of the groove are obtained in the same way also, using, of course, elements through a_2, b_2, etc., instead of a and b.

207. Multiple-turn Cylindrical Cam. Fig. 265 shows a cylindrical cam which requires two revolutions to complete the full cycle of motion of its follower. The method of designing such a cam would be similar in principle to that described for the simple cam in Fig. 264. The follower in a case like this may require a special form in order to pass properly the places where the groove crosses on itself. This is suggested in Fig. 266. The follower F is made to fit the groove sidewise,

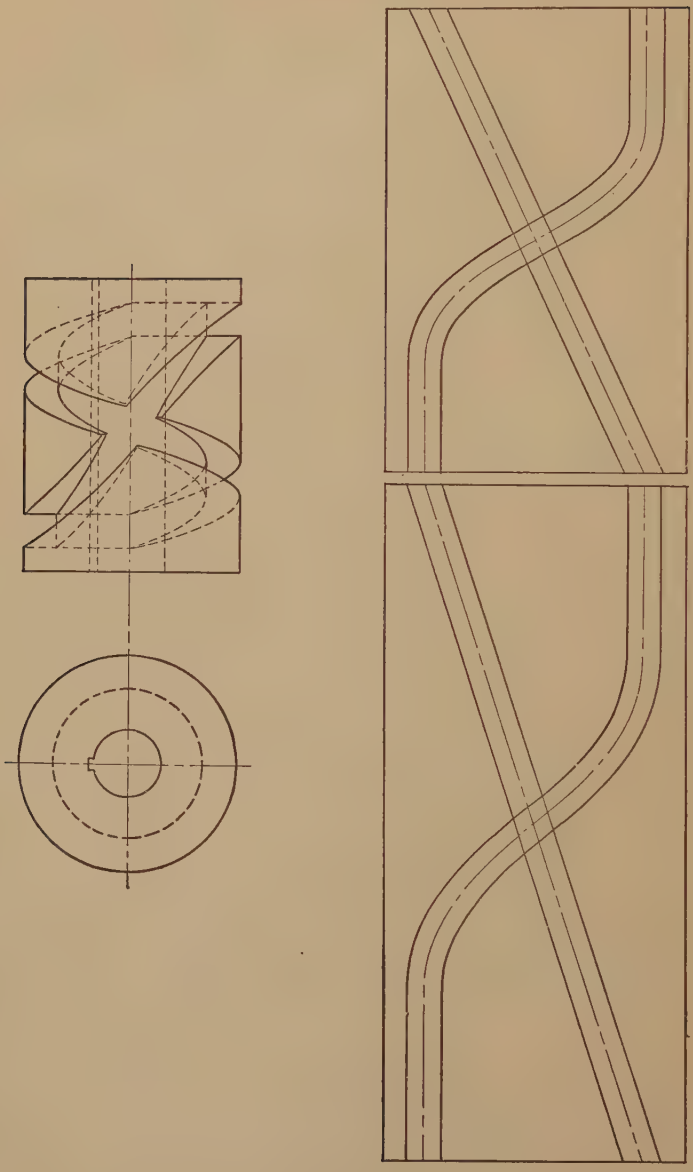

Fig. 265

and is arranged to turn in the sliding rod, to which it gives motion in a line parallel with the axis of the cam. The guides for this rod are attached to the bearings of the cam, *A* and *B*, which form a part of the frame of the machine. A plan of the follower is shown at *G*: its elongated shape is necessary so that it may properly cross the junctures of

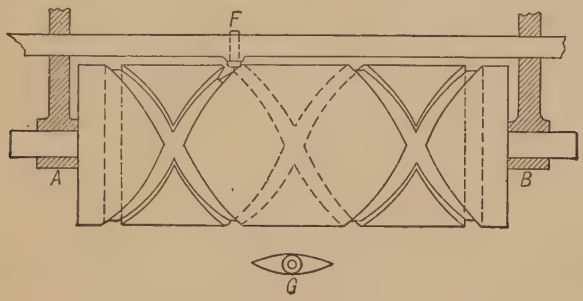

FIG. 266

the groove. In this cam there is a period of rest during one-half a turn of the cam at each end of the motion; the motion from one limit to the other is uniform, and consumes one and one-half uniform turns of the cam.

The cylinder may be increased in length, and the groove may be made of any desirable lead; the period of rest can be reduced to zero, or increased to nearly one turn of the cam. A cylindrical cam, having a right- and a left-handed groove, is often used to produce a uniform reciprocating motion, the right- and left-handed threads or grooves passing into each other at the ends of the motion, so that there is no period of rest.

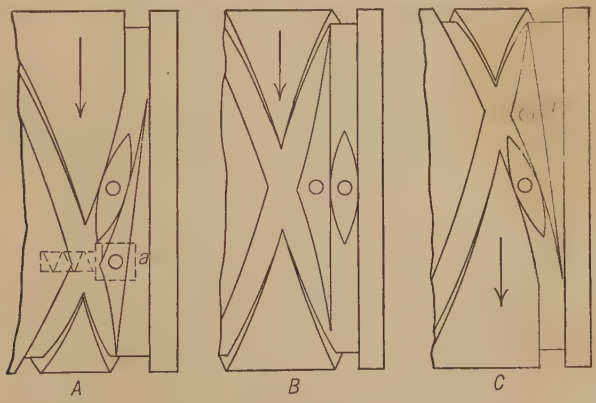

FIG. 267

The period of rest in a cylindrical cam, like that shown in Fig. 266, can be prolonged through nearly two turns of the cylinder by means of the device shown in Fig. 267. A switch is placed at the junction of

the right- and left-handed grooves with the circular groove, and it is provided that the switch shall be capable of turning a little in either direction upon its supporting pin, while the pin is capable of a slight longitudinal movement parallel with the axis of the cylinder. This supporting pin is constantly urged to the right by a spring, shown in *A*, which acts on a slide carrying the pin; when in this position the space *a* between the switch and the circular part of the groove is too small to allow the follower to pass, and when the follower is in the position shown in *B*, the spring is compressed; then, if the follower moves on, the space behind it is closed, as the spring will tend to push the support to the right, and swing the switch on the follower as a fulcrum.

If the cam turns in the direction of the arrow, in *A* the shuttle-shaped follower is entering the circular portion of the groove, and leaves the switch in a position which will guide the follower into the circular groove when it again reaches the switch; in *B* the switch is pressed toward the left to allow the follower to pass. As motion continues, the support of the switch is pressed to the right, and the switch is thrown into the position shown in *C* ready to guide the shuttle into the returning groove. The period of rest in this case continues for about one and two-thirds turns of the cylinder.

Fig. 268 shows an arrangement which may be applied for guiding a wire or cord as it winds upon a spool. The hub of the sheave is bored to fit the outside of the shaft. The shaft is stationary and has a right-

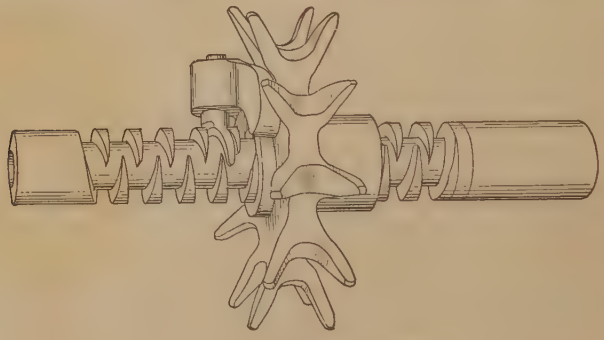

Fig. 268

handed groove and a left-handed groove cut in it, and is therefore a stationary cylindrical cam. On the side of the sheave is a projection which supports the pin on which the specially constructed follower is carried. The wire or cord, passing over the sheave, causes it to turn, and as it turns it receives a reciprocating motion along the axis of the cam.

208. Cylindrical Cam Acting on a Lever. If the follower for a cylindrical cam is a pin or roller on the end of a lever, so that it moves in an arc instead of a straight line, as in Fig. 269, an exact construction would require that allowance be made for the curvature of the path when making the development. This degree of refinement is usually unnecessary, from a practical point of view, and the cam may be designed on the assumption that the path of the follower is a straight line parallel to the elements of the cylinder.

If the lever is in a plane passing through the axis of the cam, as in Fig. 270, the end of the lever may be considered as one tooth of a worm

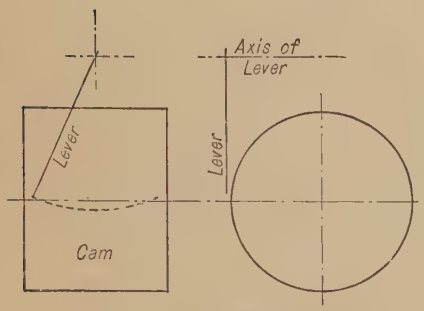

FIG. 269

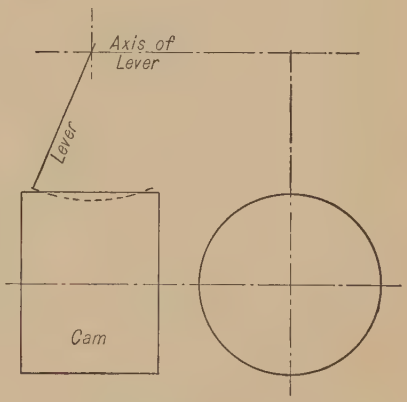

FIG. 270

wheel or helical gear, and be given the form of such a tooth. The cam itself then corresponds to the worm or to the mating helical gear except that its groove is not necessarily helical.

209. Combinations of Two or More Cams. In various automatic machines the movements of parts which have to be timed with respect to each other are often obtained by the use of two or more cams properly designed, and properly adjusted to give each piece its desired motion at the required time. Fig. 271 shows how a cylindrical cam and a plate cam might be arranged to work in combination with each other. In this case the cylindrical cam makes two revolutions for every one of the plate cam. The cylinder R is caused to swing back and forth by the lever S which, in turn, is operated by the plate cam.

With the mechanism in the position shown, the cylindrical cam makes one-eighth turn in the direction shown, after which the pin T starts to move to the right with harmonic motion. T moves to the right the total distance of $1\frac{3}{8}$ in., during three-eighths of a turn of the cylindrical cam, after which it remains at rest for one-eighth turn of the cam, then re-

turns to its original position during the remaining three-eighths turn. The plate cam is so designed that, turning left-handed as shown, the cylinder R begins to turn after T has moved to the right $\frac{3}{4}$ of an inch.

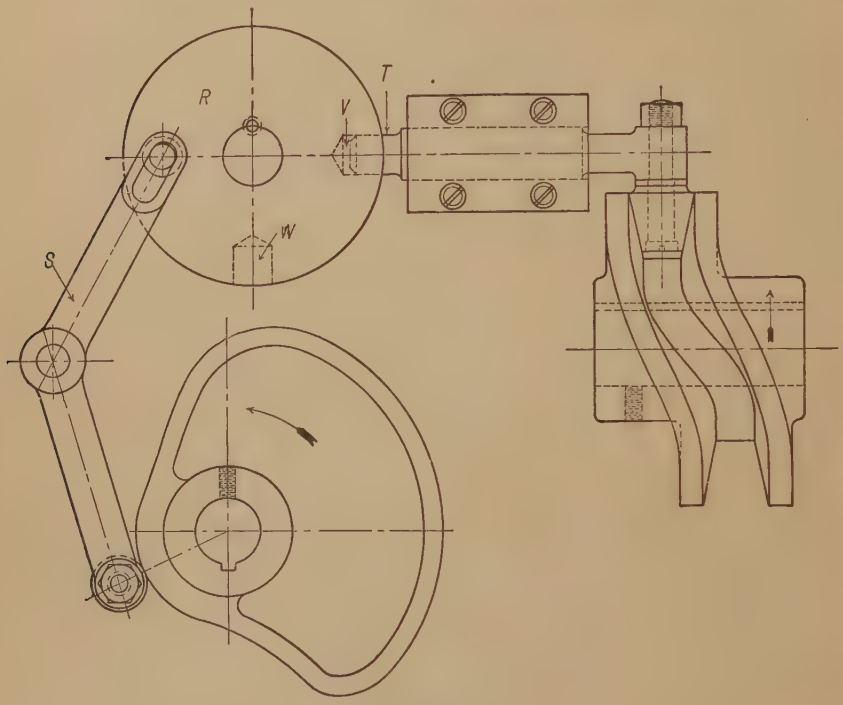

Fig. 271

It continues to turn with uniformly accelerated and uniformly retarded motion until T gets back again to within $\frac{3}{4}$ of an inch of its left-hand position.

The hole W will then be in the position now occupied by the hole V. R will then stop its motion and T will be inserted into the hole W. During the next revolution of the cylindrical cam T has a motion the same as before, and the plate cam swings the cylinder R back to its original position.

CHAPTER X

FOUR-BAR LINKAGE. RELATIVE VELOCITIES OF RIGIDLY CONNECTED POINTS

210. The Four-Bar Linkage will be discussed fully in a later chapter, the purpose of the present chapter being to study the relative linear velocities of connected points, particularly points on a linkage. Only such consideration will be given to the linkage itself at this time as to make it possible to study the velocities understandingly.

Fig. 272 shows in a simple form a mechanism known as a **four-bar linkage.** E is a fixed piece, such as the frame of a machine. A

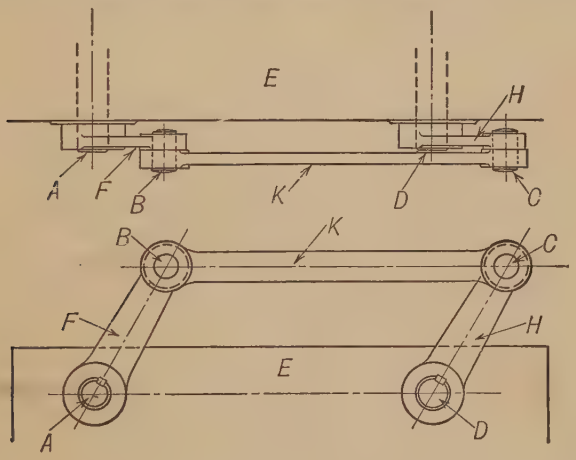

FIG. 272

and D are shafts having their bearings in E. The line joining the centers of A and D is called the **line of centers.** The piece F, called a **crank,** is keyed to A. H is a similar crank keyed to D. The outer ends of F and H are connected to each other by the **connecting rod** K and the **crank pins** B and C. B may be made fast to K and be free to turn in the hole in F or it may be fast to F and free to turn in K. Similarly, the pin C may be free to turn in either H or K.

If shaft A is caused to revolve, the crank F will revolve with it, the center of the pin B moving in a circle whose center is the center of A. This movement of B will, through the connecting rod K, cause the

pin C to move, and since C can move only in a circle about the center of D the crank H will be caused to turn, turning D with it.* Each

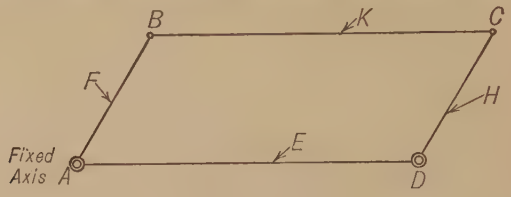

Fig. 273

one of the pieces, E, F, K, and H, is called a **link,** and the whole system is called a **four-bar linkage.**

It is convenient, in studying linkages, to indicate them by the center lines of the links, as shown in Fig. 273 which represents the same linkage as that shown in Fig. 272.

211. Four-Bar Linkage with a Sliding Member. In Fig. 274, the end of the connecting rod carries a block, pivoted to it at C, which slides

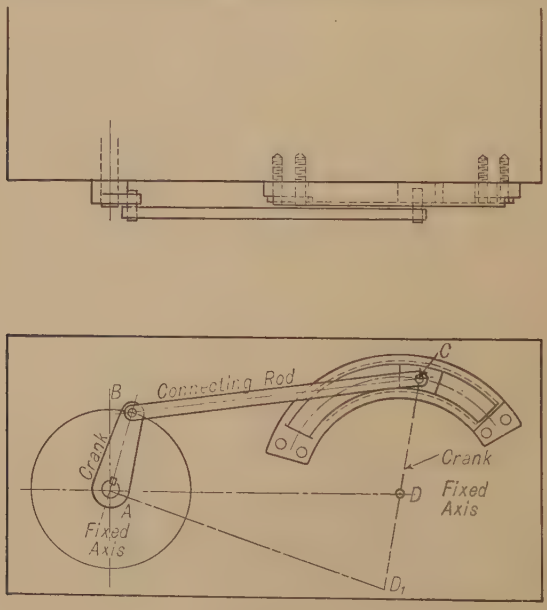

Fig. 274

back and forth in the circular slot as the crank AB revolves. The center of the slot is at D. The center of the crank pin C evidently has the same motion that it would have were it guided by a crank of length

* Some provision is necessary for passing the positions where the connecting rod and driven crank come into line with each other.

DC turning about D. The mechanism, therefore, is really a four-bar linkage with the lines AB and DC as center lines of the cranks, AD as the line of centers, and BC as the center line of the connecting rod.

Let it now be supposed that the slot is made of greater radius than that shown in the figure, for example, with its center at D_1. Then the equivalent four-bar linkage would be $ABCD_1$.

Carrying the same idea still further, let the slot be made straight. Then the equivalent center D would be at a point an infinite distance

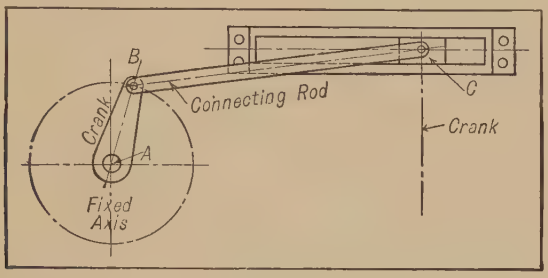

FIG. 275

away. The mechanism, however, would still be the equivalent of a four-bar linkage, as shown in Fig. 275, where AB is one crank, the line through C perpendicular to the slot is the other crank, BC the connecting rod, and a line through A parallel to the crank through C is the line of centers.

Fig. 276 shows the special form in which this linkage commonly occurs, where the center line of the slot passes through the center of

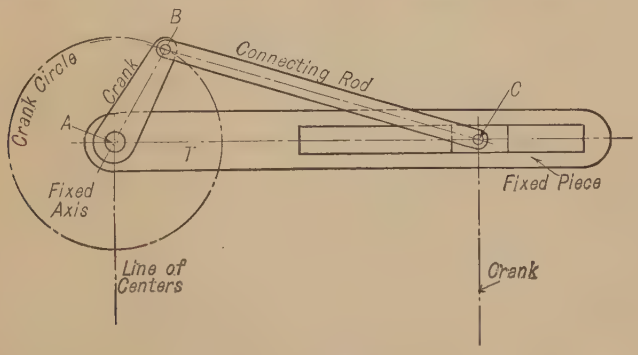

FIG. 276

the shaft A. This is the mechanism formed by the crank shaft, crank, connecting rod, crosshead and crosshead guides of the reciprocating steam engine.

212. Relative Motions of the Links. In the four-bar linkage shown in Fig. 277, A and D are the stationary axes, AB and DC the cranks and BC the connecting rod. If the crank AB turns from the position shown in full lines to the right-hand dotted position — that is, turns through the angle BAB_1 — the pin B will travel over the arc BB_1. This will cause the connecting rod to move and push the pin C along its path to C_1.

It is apparent from the figure that the length of the arc CC_1 is not equal to the length of the arc BB_1. In other words, with the several links having the relative lengths as here shown, the linear speeds of

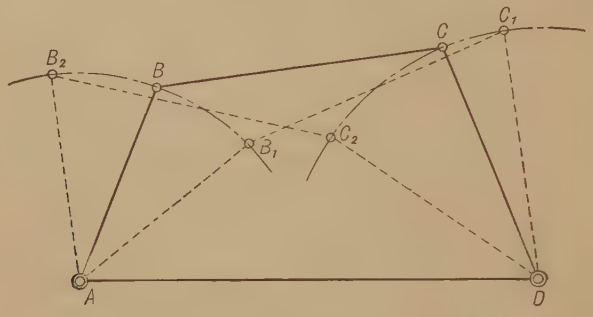

FIG. 277

the crank pins will differ. If, furthermore, B is moved to B_2, C will move to C_2. Now the arc BB_2 is made equal to BB_1, but CC_2 is evidently not equal to CC_1. This construction, therefore, suggests that if the crank AB is turned with uniform angular speed so that the crank pin B has a uniform linear speed, the crank pin C has a varying linear speed and the crank DC a varying angular speed. It will be shown, later (see § 227), that the motions of the links of a specific four-bar linkage *relative to each other* are always the same whichever of the four links is the stationary one.

It will be apparent also, when the preceding statement is shown to be true, that the *relative linear velocities* of points on any of the links are independent of the fixedness of the links.

213. Graphical Representation of Motions and Linear Velocities. For convenience in graphical work in connection with the study of velocities it is customary to represent the velocity of a point by a straight line whose direction and length indicate the direction and magnitude of the velocity of the point. For example, let it be assumed that the block M (Fig. 278) is sliding to the right on the guide, at the rate of one foot per second. If it is desired to represent the velocity of any point A on this block by a line, any unit of length may be assumed

to represent one foot per second. Suppose one inch equals one foot per second is chosen as the convenient scale; then a line one inch long is drawn from A to the right, parallel to the guide, with an arrow head at its end pointing to the right.

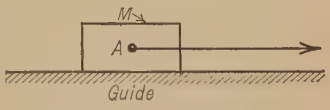

FIG. 278

If the point is moving in a curved path the line representing its velocity is drawn tangent to the path at the position of the point on the instant under consideration.

If the point has a variable speed the length of the line representing its velocity is made equal to the distance the point would move if it continued for a unit of time with the same speed which it has at the instant under consideration.

214. Resultant Motion. If a material point receives a single impulse in any direction, it will move in that direction with a certain velocity. If it receives at the same instant two impulses in different directions, it will obey both, and move in an intermediate direction with a velocity differing from that of either impulse alone. The position of the point at the end of the instant is the same as it would have been had the motions, due to the impulses, occurred in successive instants. This would also be true for more than two motions. The motion which occurs as a consequence of two or more impulses is called the **Resultant,** and the separate motions, which the impulses acting singly would have caused, are called the **Components.**

215. Parallelogram of Motion. Suppose the point a (Fig. 279) to have simultaneously the two component motions represented in magnitude and direction by ab and ac. Then the resultant is ad, the diagonal of the parallelogram of which the component motions ab and ac are the sides. Conversely, the motion ad may be resolved into two components, one along ab, and the other along ac, by drawing the parallelogram $abdc$, of which it will be the diagonal.

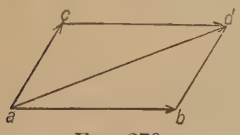

FIG. 279

Any two component motions can have but one resultant, but a given resultant motion may have an infinite number of pairs of components. In the latter case there is a definite solution provided the directions of both components are known or the magnitude and direction of one. If the magnitudes of both components are known there are two possible solutions. Thus in Fig. 280, where ad is the given resultant, if the

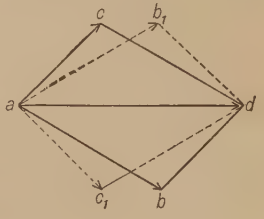

FIG. 280

two components have the magnitudes represented by *ac* and *ab*, the directions *ac* and *ab* will solve the problem, or the directions ac_1 and ab_1 will equally well fulfil the conditions.

216. Parallelopiped of Motions. If the three component motions *ab*, *ac*, and *ad* (Fig. 281) are combined, their resultant *af* will be the diagonal of the parallelopiped of which they are the edges. The motions *ab* and *ac*, being in the same plane, can be combined to form the resultant *ae*; in the same way *ae* and *ad* can be combined, giving the resultant *af*. Conversely the motion *af* may be resolved into the components *ab*, *ac*, and *ad*.

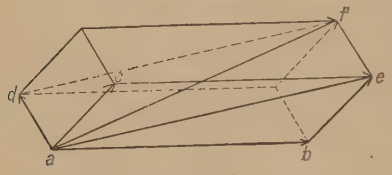

FIG. 281

To find the resultant of any number of motions: First, combine any two of them and find their resultant; then, combine this resultant with the third, thus obtaining a new resultant, which can be combined with the fourth; and so on.

217. Composition and Resolution of Velocities. If the motions referred to in the preceding paragraphs are assumed to be uniform and to take place in a unit of time, the lines in Figs. 279, 280, and 281 may be considered as representing the velocities as well as the motions. If the motion of the point is variable and the lines *ac* and *ab* (Figs. 279 and 280), or *ac*, *ab*, and *ad* (Fig. 281), represent the velocities imparted to the point *a* by the impulses acting in the respective directions *at the instant*, then the lines *ad* (Figs. 279 and 280) and *af* (Fig. 281) represent the actual, or resultant, velocities at that particular instant, but not the actual motions. In other words (Fig. 279), *ad* indicates the motion which *a* would have in a unit of time if the impulses now acting continued unchanged, and therefore indicates the present velocity, but the motion was assumed to be variable, therefore present conditions are instantaneous only, and *ad* does not indicate the actual motion but only the instantaneous tendency.

218. Relation between Linear Velocities of Rigidly Connected Points. If two points are so connected that their distance apart is invariable and if their velocities are resolved into components at right angles to and along the straight line connecting them, the components along this line of connection must be equal, otherwise the distance between the points would change.

This may be seen by considering the center line of the connecting rod of a four-bar linkage, Fig. 282.

Assuming that the crank *AB* is turning at such an angular speed that the crank pin *B* has a linear velocity represented by the line *Bb*,

let it be required to find the line which represents, at the same scale, the linear velocity of C. Since Bb indicates the velocity of B at the instant, B would, if not restrained by the crank, move to a point represented by b in a unit of time. The same point would be reached if for a part of the unit of time B should have the velocity represented by Be, moving along the line CB extended, to the point e which is the foot of a perpendicular let fall from b to CB, then from e moving out along this perpendicular with a velocity represented by eb. That is, the velocity of B may be considered as the resultant of the component Be, along the connecting rod, and the component Be_1 (equal to eb) of rotation about some point on the center line of the connecting rod. Al-

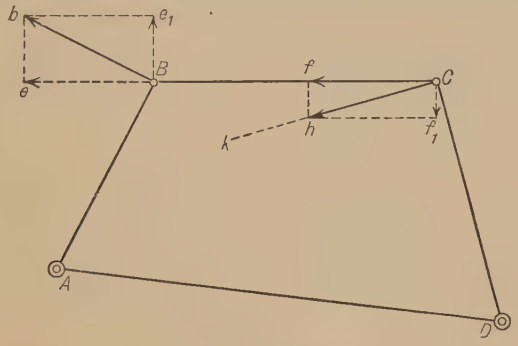

FIG. 282

though B does not actually go to b its tendency at the instant is to go there in a unit of time, and its tendency to move along the line CB is such that, if there were no components at right angles to CB, it would go to e in a unit of time. It is this tendency of B to move along the line CB, that is, the component of Bb along the line CB which causes C to move, and since CB is a rigid rod which can be neither lengthened nor shortened, C must have a component velocity (or tendency to move) along the line CB equal to that of B, that is, equal to Be. The direction of the other component which, when combined with this one, will give the actual velocity of C must be at right angles to the rod BC, because this component has no effect along the rod.

The actual direction of the velocity of C is along a line Ck perpendicular to DC. Then, to find the velocity of C lay off Cf equal to Be and through f draw a line perpendicular to CB meeting Ck at h. Ch then represents the velocity of C at the same scale at which the velocity of B is represented. For example, if Ch is found to be three-fourths as long as Bb, it will indicate that at that instant C has a velocity which is three-fourths of that of B. The above method really consists, then, of treating the whole rod as if all points were given an impulse in the

direction CB such as to cause them to have velocities equal to Be along CB and, simultaneously, each point were given another impulse at right angles to CB, causing all points to turn about some point on the center line of the rod.

219. Instantaneous Axis of Connecting Rod. The discussion in the preceding paragraphs shows that one end of the connecting rod in Fig. 283 is moving at the instant in the direction Bb, perpendicular to AB, while the other end is moving in the direction Ch, perpendicular to DC. The direction of B is the same wherever the axis of rotation is located on the line AB or AB extended. Similarly, the direction of C is the same wherever its axis of rotation is located on DC or DC

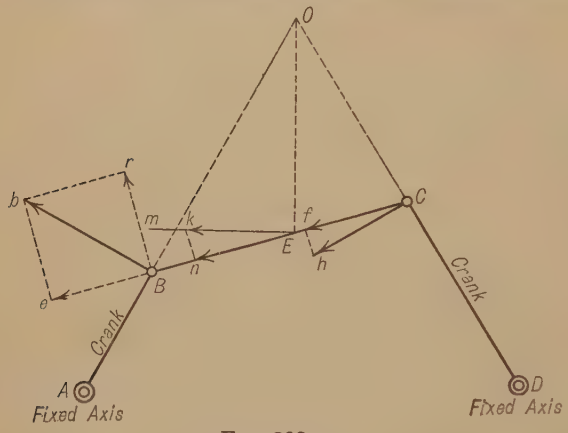

FIG. 283

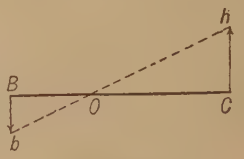

FIG. 283a

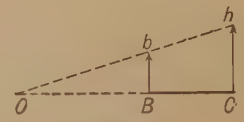

FIG. 283b

extended. Hence, both these points B and C might be treated for the instant as if they were turning about the point which is common to AB and DC, that is, their point of intersection O. B and C are points on the connecting rod BC, as well as on the cranks, therefore, the whole rod BC may be treated for the instant as if it were turning about O as an axis. The point O is the trace of a line which is called the **instantaneous axis** of BC. The principle is the same as if the connecting rod were made fast to a wheel which, for the moment, is turning about O as an axis. It follows that the velocity of C is to the velocity of B as OC is to OB.

If the mechanism were such that the motions of the points B and C were not in the same plane, the instantaneous axis would be found as follows: Pass a plane through the point B perpendicular to Bb; the motion Bb might then be the result of a revolution of B about any axis in that plane. In the same manner, the motion of Ch might be the result of a revolution of C about any axis in the perpendicular plane

through C. The points B and C, being rigidly connected, must rotate about one axis, which in this case will be the intersection of the two perpendicular planes.

If the motions of the two points B and C are in the same plane and parallel, as in Figs. 283a and 283b, the perpendiculars through B and C coincide and the above method fails. Let Bb and Ch be the velocities of the points B and C respectively. To find the instantaneous axis draw a right line through the points b and h in each case and note the point O where it intersects BC or BC produced. This must be the instantaneous axis, for from the similar triangles BbO and ChO

$$\frac{Bb}{Ch} = \frac{OB}{OC},$$

that is, the velocities of B and C are proportional to the distances of these points from O.

The trace of the instantaneous axis on the plane of the drawing is often called the **instantaneous center.**

220. Centrode. If the position of the instantaneous axis of a connecting rod or other moving link is found for a series of positions through the entire cycle of motion of the linkage, and a smooth curve is drawn through these different positions of the instantaneous axis, the curve thus found is called the **centrode** of the link in question.* Some of the properties of centrodes and the uses made of them will be taken up later in connection with certain special examples of four-bar linkages.

221. Instantaneous Axis and Centrode of a Rolling Body. The instantaneous axis of a rigid body which rolls without slipping upon the surface of a fixed rigid body must pass through all the points in which the two bodies touch each other, for the points in the rolling body which touch the fixed body at any given instant must be at rest for the instant, and must, therefore, be in the instantaneous axis. As the instantaneous axis is a straight line, it follows that rolling surfaces which touch each other in more than one point must have all their points of contact in the same straight line in order that no slipping may occur between them. This property is possessed by plane, cylindrical and conical surfaces only; the terms *cylindrical* and *conical* being used in a general sense, the bases of the cylinders and cones having any figure as well as circles. The surface of the fixed body is the centrode of the moving body.

* In reality the centrode is the locus of the instantaneous center, the locus of the instantaneous axis being a surface sometimes called the axoid. The term centrode is commonly used for the locus of the axis itself as well as for the locus of its trace.

222. Velocities of Points on Rolling Bodies. Let B, Fig. 284, be the center of a wheel resting on a track at the point A. If a pull is exerted at the center along the line Bb, parallel to the track, B will

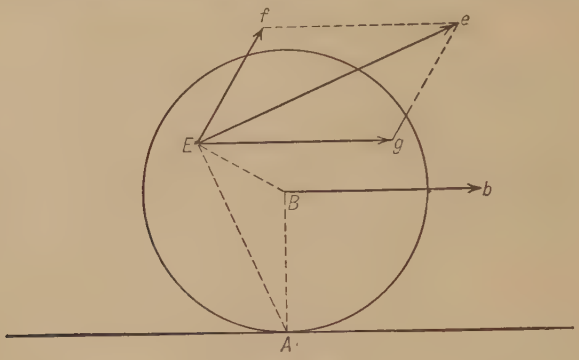

FIG. 284

move in the direction Bb. The effect is the same for the instant as if AB were a crank turning about A as an axis and since AB is an imaginary line on the wheel, the whole wheel becomes a crank turning about A as an axis.

Any other point on the wheel, as E, must at the instant in question be moving about A as an axis, and therefore the direction of the velocity of E is Ee perpendicular to the line AE. The magnitude of this velocity is to the magnitude of the velocity of B as AE is to AB.

This velocity Ee is made up of rotation about the center B of the wheel combined with a velocity parallel to the track equal to the velocity of B. That is, the real velocity Ee may be considered as consisting of the components Eg (which is equal and parallel to Bb) and Ef perpendicular to BE and of such magnitude that the figure $gefE$ is a parallelogram.

223. Typical Problems on Resolution and Composition of Velocities. The general principles presented in the foregoing paragraphs furnish the basis for the determination of the absolute and relative linear velocities of points on a four-bar linkage or, in fact, of points on any moving piece or pieces. A full and clear understanding of the methods of solving such problems can be gained only by studying the actual solutions of a number of cases. The following examples have been chosen with this end in view. Some of the illustrations are taken directly from actual machines; others are modified in order to show the principles more clearly; still others are hypothetical cases involving constructions which are likely to occur in actual cases. Some of the examples involve special applications of the four-bar linkage which

will be analyzed later but which are introduced here merely as examples in velocities.

Example 58. In Fig. 283 let AB and DC be the center lines of the cranks of a four-bar linkage, A and D being the fixed axes. Let the linear velocity of the crank pin B be represented by the line Bb perpendicular to AB. It is required to find the lines which shall represent at the same scale, the linear velocities of the crank pin C and of any point E on the center line of the connecting rod.

Solution. Resolve the velocity Bb into the two components Be and Br along CB and at right angles to CB, respectively. Make Cf equal to Be and through f draw a line perpendicular to CB meeting, at h, a perpendicular to DC, drawn through C. Then Ch represents the velocity of C.

To find the velocity of E it is necessary to find, first, the direction in which E is moving at the instant. This is done by finding the instantaneous axis of CB. AB and DC are produced until they meet at O, which is, therefore, the instantaneous axis of CB. OE is next drawn, and the direction of the velocity E is along a line Em perpendicular to OE. The magnitude of this velocity is found by laying off En equal to Be and drawing a line through n perpendicular to CB meeting Em at K. EK is the required line representing the velocity of E.

Example 59. Fig. 285 shows in a diagrammatic form the crank, connecting rod and crosshead of a steam engine. Let Bb represent the velocity of B. It is required

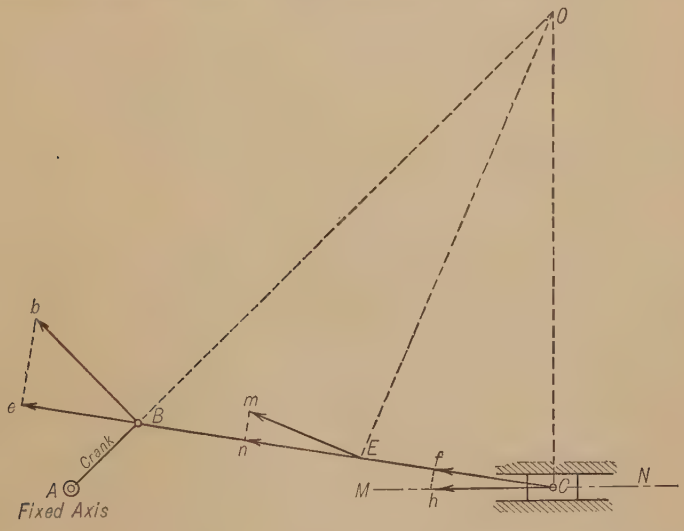

FIG. 285

to find the velocity of the center C of the crosshead pin and of a point E on the center line of the connecting rod.

Solution. Bb is resolved into components along and at right angles to CB giving Be as the component along CB. Make Cf equal to Be. Now C is moving along the line NM parallel to the guides. Therefore, the velocity of C is Ch, found by drawing a perpendicular to CB at f meeting NM at h.

The instantaneous axis of CB is at the point O, where a perpendicular to NM through C meets AB produced. Knowing the position of this instantaneous axis the velocity of E can be found as in the preceding example.

Example 60. With data the same as for Example 59, except that the connecting rod is a bent bar, as shown in Fig. 286, let it be required to find the lines representing the linear velocity of C and E.

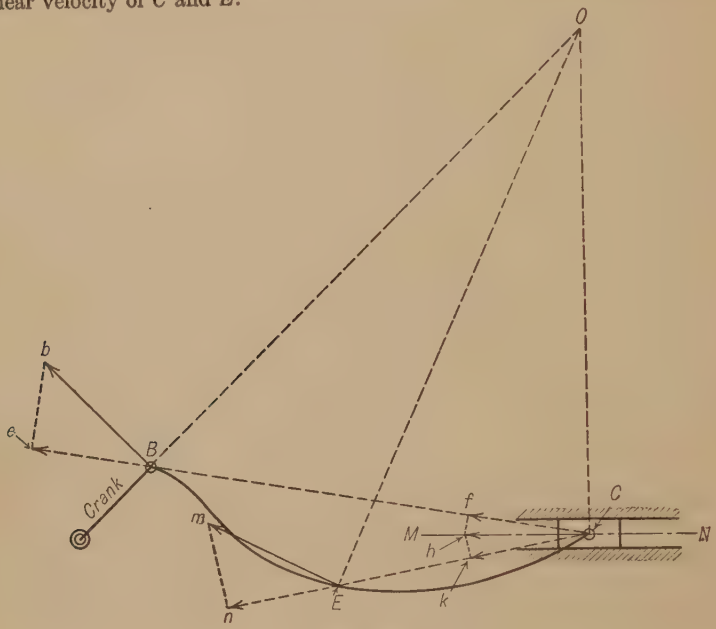

FIG. 286

Solution. Since the curved bar BEC is rigid the straight line BC may be substituted for it without affecting the relations of B and C. Hence this line may be used as the line of connection between B and C and the velocity of C may be found from the known velocity of B as in Example 59. To find the velocity of E the instantaneous axis of BEC is found at O as in Example 59. E is then joined to O and the direction of the velocity of E is along a perpendicular to OE through E. Join C and E and resolve the velocity Ch into components along and at right angles to the line CE. The component En, of the velocity of E, along CE produced is equal to the component Ck of the velocity of C, along CE, the other component in each case being at right angles to CE. Hence lay off En equal to Ck and through n draw a line perpendicular to En meeting Em at m. Em then represents the velocity of E.

Example 61. In Fig. 287, D is a disk keyed to the shaft A, the center of the disk being at B. R is a rod, one end of which embraces the pin C on the slider; the other end is enlarged to form the strap S and contains a cylindrical hole just fitting over the disk D. If the shaft A turns at such an angular speed that a linear velocity Bb is imparted to the center B (Bb being perpendicular to the line from B to the center of the shaft A), let it be required to find the linear velocity imparted to C.

Solution. Since the hole in S is concentric with D its center must coincide with B in every position which the mechanism occupies and the mechanism is the equivalent of the linkage in Fig. 285. (This relation will be shown in another way in the next chapter.) Hence the problem becomes the same as in Example 59.

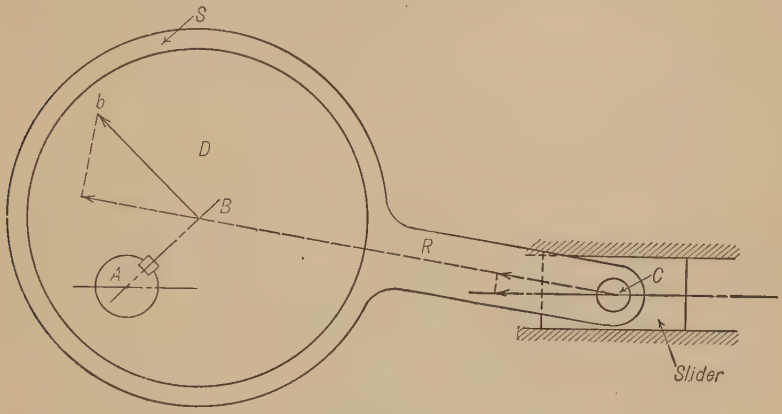

FIG. 287

Example 62. In Fig. 288 AB is a crank turning about the fixed center A. BC is a connecting rod pivoted to the slider S at C and prolonged to E. From E another link EF connects to the slider T. If Bb represents the velocity of B let it be required to find the velocity of F (that is, of the slider T).

Solution. The instantaneous axis of BCE is at O, hence the direction of the motion of E is perpendicular to OE. Resolve the velocity Bb into components along

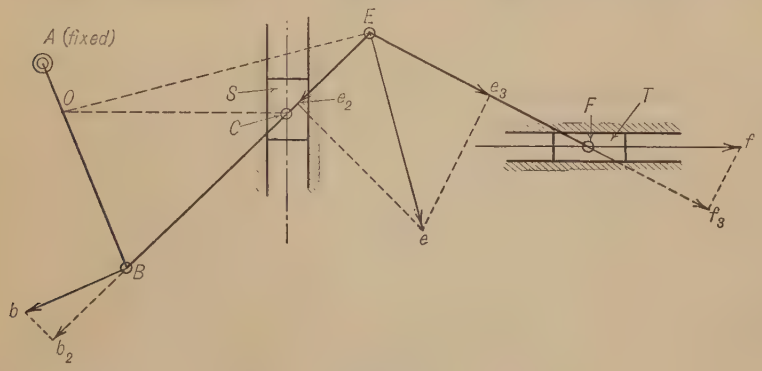

FIG. 288

and at right angles to BCE and transfer the component Bb_2, thus found, to Ee_2. Through e_2 draw a perpendicular to Ee_2 meeting Ee at e. Ee is the velocity of E. Next resolve Ee into components along and perpendicular to EF, getting Ee_3 along EF. Make Ff_3 equal to Ee_3 and through f_3 draw a perpendicular to Ff_3 meeting the line of motion of F at f. Ff is the required velocity of F.

Example 63. In Fig. 289 the connecting rod of the four-bar linkage is prolonged in a curve to E. If Bb_1 represents the velocity of B let it be required to find the velocity of E.

Solution No. 1. The instantaneous axis of CBE is found at O, hence the direction of E is perpendicular to OE. The line of connection between B and E is the

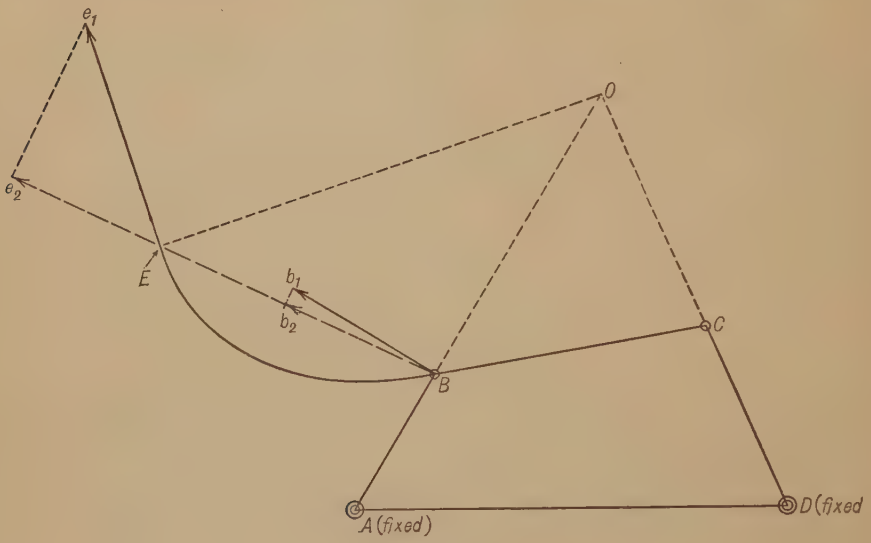

FIG. 289

straight line BE. Resolve the velocity of B into components along and perpendicular to BE, getting Bb_2 along BE. Make Ee_2 equal to Bb_2 and through e_2 draw a perpendicular to Ee_2 meeting Ee_1 at e_1. Then Ee_1 represents the velocity of E.

Solution No. 2. (Fig. 290.) Find the velocity of C $(= Cc_1)$ as in previous examples. Then Cc_3 is the component of Cc_1 which represents turning about some point on BC when the component of translation in direction CB is $Cc_4 = Bb_4$. Bb_3 is the component of Bb, which represents turning about the same point on BC. These components of turning must be proportional to the distances of B and C from the axis about which the turning occurs. R is this axis and is found by drawing b_3c_3 cutting BC at R. It should be observed that R falls at the foot of the perpendicular to BC let fall from the instantaneous axis of BC and that its component of turning is zero, hence its true velocity is along CB and is equal to Bb_4. From the above reasoning it follows that the motions of all points on the rod CBE *relative ot each other* are the same at the instant as they would be if the rod were turning about R as a fixed axis. Then Ee_3 is the component of turning of E about R and is found by making Ee_3 perpendicular to RE and $\frac{Ee_3}{Bb_3} = \frac{RE}{RB}$. Next make the component of translation Ee_4 equal and parallel to Bb_4 and complete the parallelogram of which Ee_4 and Ee_3 are sides. The diagonal Ee_1 of this parallelogram represents the actual velocity of E and is the same line as Ee_1 in Fig. 289. This method of solution is of

value when the instantaneous axis falls off the paper or in such a position that it cannot be used conveniently.

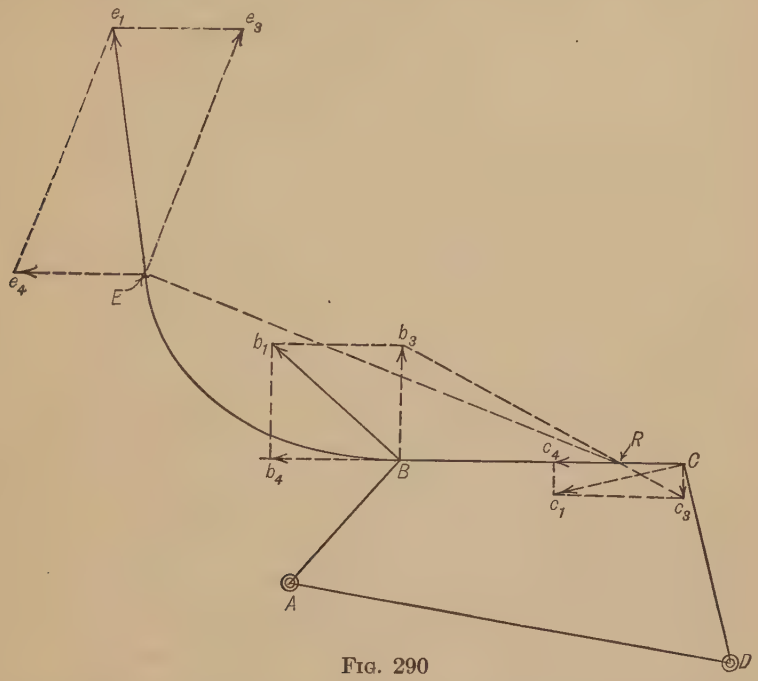

FIG. 290

Example 64. (Fig. 291.) The long slider S has attached to it, at the pin C, the link CB, the other end of which is connected to the crank AB. At E is a link EF connecting at F with the link DF which is also connected to S. If Bb_1 represents the linear velocity of B let it be required to find the linear velocity of F.

Solution. Resolve Bb_1 into components along and perpendicular to CB, getting Bb_2. Make Cc_2 equal to Bb_2 and draw c_2c_1 perpendicular to Cc_2 meeting the line of motion of C at c_1. Then Cc_1 represents the velocity of C. The velocity of D must be the same as that of C, therefore make Dd_1 equal to Cc_1. Resolve Dd_1 into components along and perpendicular to DF, getting Dd_2 as the component along DF. Make Ff_2 equal to Dd_2. Then Ff_2 is the component of the (as yet unknown) velocity of F in the direction DF when the other component is perpendicular to DF. Hence the line representing the velocity of F must terminate somewhere on the perpendicular (f_2m) to Ff_2 through f_2. (In other words Ff_2 is the projection, upon the line DF produced, of the line representing the velocity of F.) Thus, by first finding the velocity of D, it is possible to find the component of translation along the direction DF of the point F when the motion of F, for the instant, is considered as consisting of components of translation along DF and of turning about some point on DF.

In a similar manner may be found the component Ff_3 of translation in the direction FE when the motion of F is considered as consisting of translation along FE and turning about some point on FE. First find the velocity of E by locating the instantaneous axis O of CEB. The direction of E is perpendicular to OE and the length of the line Ee_1 representing its velocity is found by making Ee_2 equal to Bb_2

and drawing e_2e_1 perpendicular to Ee_2, meeting Ee_1 at e_1. Next resolve Ee_1 into components along and perpendicular to FE, getting Ee_3. Make Ff_3 equal to Ee_3 and at f_3 draw a line perpendicular to Ff_3. Since Ff_3 is the component of the velocity of F along FE when the other component is one of turning about some point on FE

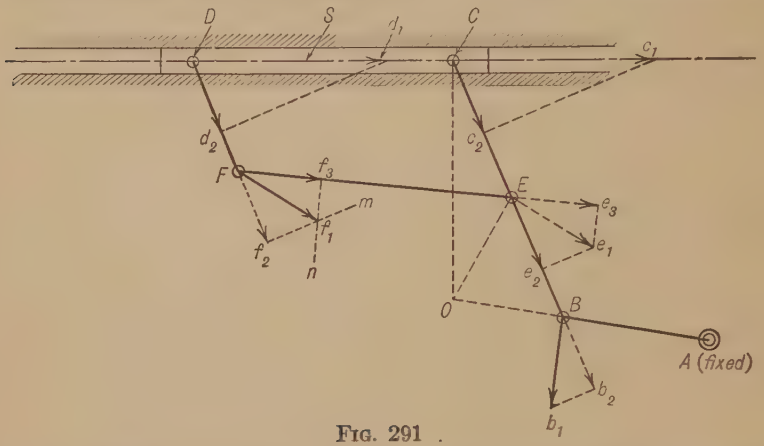

FIG. 291

the line representing the velocity of F must terminate somewhere on the perpendicular (f_3n) to Ff_3 through f_3. It was shown above that the line representing the velocity of F must terminate on f_2m. Therefore the end of the desired line must be at the intersection of f_2m and f_3n, namely at f_1, and Ff_1 represents the velocity of F.

Example 65. In Fig. 292, AB is a crank turning about A. The crank pin carries a block which works in a slot whose center line is MN. This slot is in the T-shaped head of the slider S which moves in the guides G. HF is the center line of the guides and MN is at right angles to HF. If Bb represents the velocity of B, let it be required to find the velocity with which S is moving in the guides and also the rate at which the block is slipping in the slot MN.

Solution. The component of Bb which is parallel to HF will indicate the rate at which the block is causing the slot to move, and the component of Bb which is parallel to MN will indicate the rate at which the block is slipping in the slot. Therefore Bb is resolved into the two components Be and Br (or eb) parallel to HF and MN, respectively, giving Be as the velocity of S and Br (or eb) as the rate of slipping of the block in the slot.

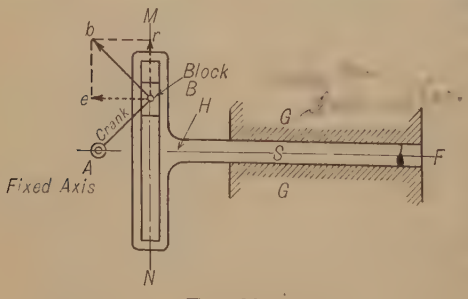

FIG. 292

The correctness of the above solution can be understood if it be assumed that the point B is actually allowed to go to b and that instead of going over the path Bb it moves first to e along Be parallel to HF. In order to go there and still remain in the slot it must move the center line MN along with it until MN passes through e. Then B moves up along eb parallel to MN until it reaches b. This latter motion, since it is parallel to the slot, does not move the slot at all, but is simply a motion of

slipping in the slot. Of course B does not actually go to b, since it is constrained to move in a circle about A and the next instant the direction of the velocity of B will be different and the rate of slipping and the velocity of S will have changed accordingly. As has already been pointed out, however, the velocities and directions shown in the figure are the ones which obtain for the instant when the mechanism is in the position shown.

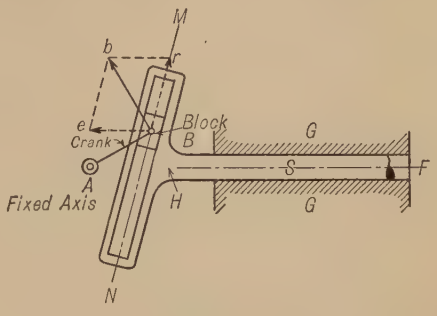

FIG. 293

Example 66. Fig. 293 shows a mechanism the same as that shown in Fig. 292, except that the center line MN is not at right angles to HF. The method of solution is the same as described in the preceding example.

Example 67. In Fig. 294, AB is a crank turning about the fixed axis A. The crank pin whose center is B carries a block working in a slot in the long arm which turns about the fixed axis G. The center line MN of this slot passes through G. If

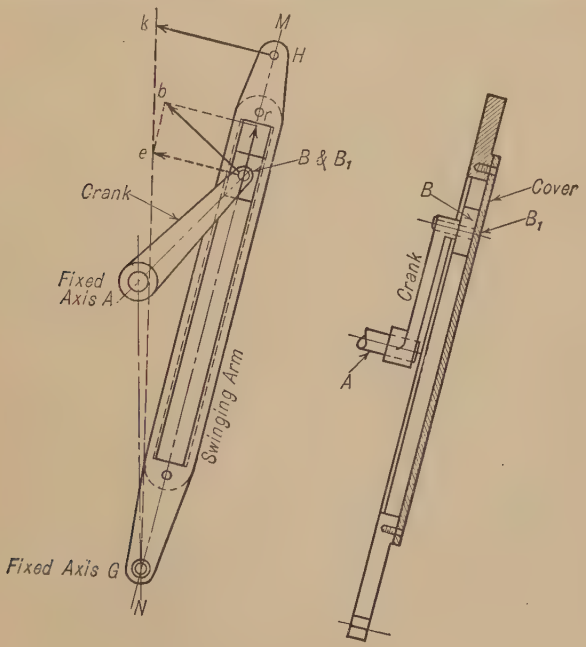

FIG. 294

Bb represents the velocity of B, let it be required to find the velocity of a point H on the swinging arm, on the center line MN.

Solution. The velocity of H is, of course, the result of an angular speed of the arm caused by the motion of the block. This problem might be solved by the

principle of the four-bar linkage and will be so analyzed later. At this point, however, it will be treated by means of the principles of resolution of velocities. Let it be assumed that the slot is covered on the back by a strip, as shown. Then a point B_1 on this strip which is directly in line with B is turning about the center G. It is necessary, first of all, to find the linear velocity of B_1. Bb is resolved into two components, Be and Br (or eb). Be is along the direction in which B_1 is moving, that is, perpendicular to BG. eb is parallel to the center line of the slot, the figure $Bebr$, as in the previous cases, being a parallelogram. Be then represents the velocity of B_1. The velocity of H is to Be as GH is to GB. Since GB and H are in a straight line the above proportion can be made graphically by drawing from G a straight line through e meeting at k the perpendicular to GH through H. The triangles GBe and GHK are similar, therefore HK is to Be as GH is to GB. Hence HK is the required velocity of H.

Example 68. Fig. 295 shows a mechanism similar to that in Fig. 294, except that the center line of the slot does not pass through G.

Solution. The principles involved in the solution are the same as those described for Example 67. The component Be is perpendicular to GB and not to MN. H

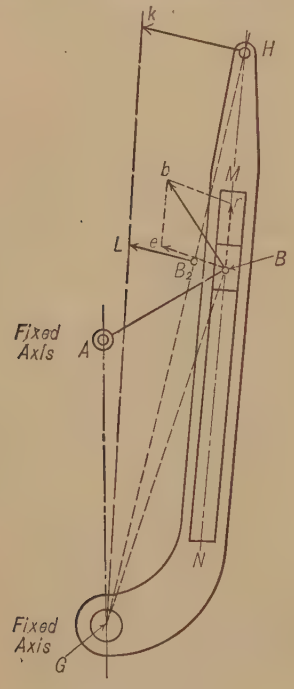

Fig. 295

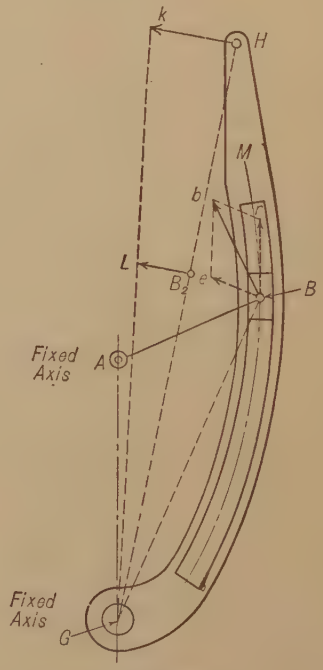

Fig. 296

has a velocity perpendicular to GH and bearing the same ratio to Be that GH bears to GB. The similar triangles can be constructed by laying off on GH a distance GB_2 equal to GB, drawing B_2L perpendicular to GB_2 and equal in length to Be, then drawing from G through L to meet the perpendicular to GH through H at K. HK is then the required velocity of H.

Example 69. The mechanism in Fig. 296 is the same as that in Fig. 295, except that the slot is curved instead of straight. The method of solution is the same. The only new point to be noticed is that the line Br is tangent to the center line of the slot at B

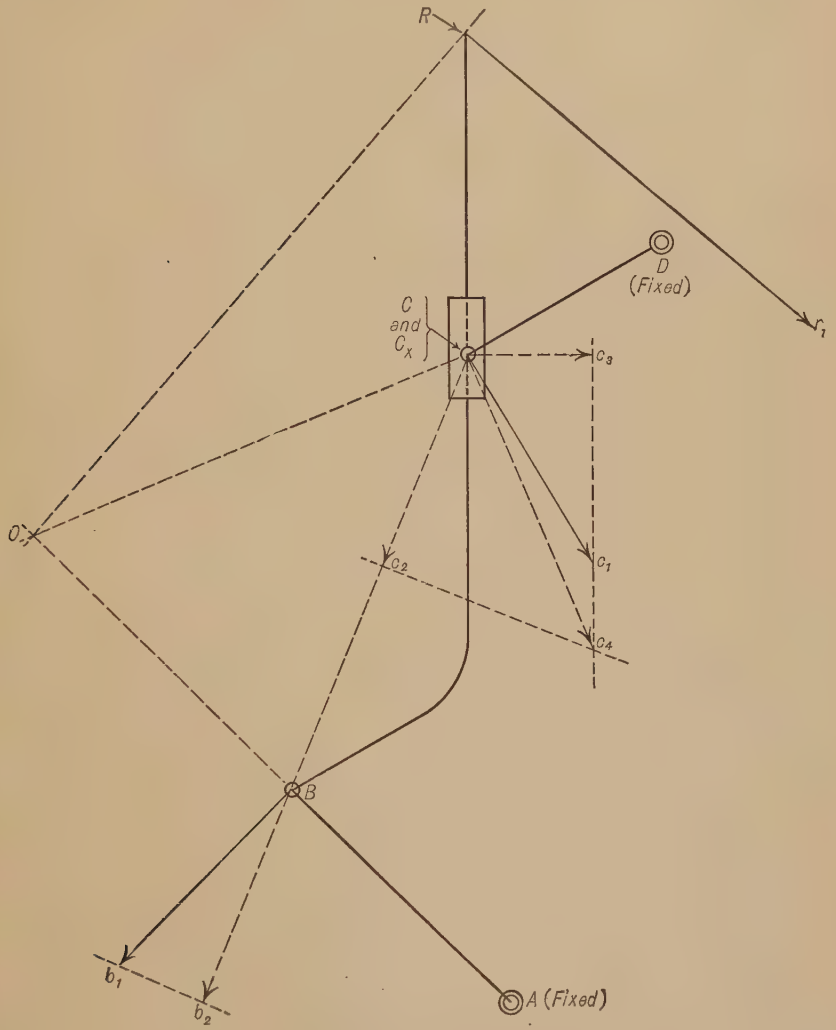

FIG. 297

Example 70. In Fig. 297 the curved bar BR slides through the block which is pivoted at C on the crank DC. The lower end of the bar is carried by the crank AB. C represents the axis of the pin by which the block is attached to the crank DC, while C_x represents the point on the bar BR which is inside the block where the axis of the pin intersects the center line of the bar. If Cc_1 represents the linear

velocity of C and Bb_1 the velocity of the axis of the pin B, let it be required to find the linear velocity of a point R on the rod.

Solution No. 1. (Fig. 297.) The component of the velocity of C_x normal to the sliding surfaces, when paired with another component in the direction of sliding, must be equal to the component of Cc_1 normal to the slide when paired with another component along the slide. This component normal to the slide is C_xc_3. Also, the component C_xc_2 along the line joining C_x and B, when paired with another component perpendicular to C_xc_2, is equal to Bb_2. Hence the velocity of C_x is C_xc_4 and the instantaneous axis of BC_xR is at O. The direction of R is therefore perpendicular to OR and the length of the line Rr_1 which represents the velocity of R is found from the equation $\frac{Rr_1}{C_xc_4} = \frac{OR}{OC_x}$.

Solution No. 2. (Fig. 298.) First assume that the axis c of the block is fixed (that is, $Cc_1 = 0$). Then the instantaneous axis of BR would be at O_1 and the line representing the velocity of R would be represented by Rr_6 perpendicular to O_1R and of a length such that $\frac{Rr_6}{Bb_1} = \frac{O_1R}{O_1B}$

Next assume B to be fixed (that is, $Bb_1 = 0$). Then the velocity of C_x would be represented by C_xc_5, found as in Example 68, and the velocity of R would be represented by Rr_5 perpendicular to BR and of a length such that $\frac{Rr_5}{C_xc_5} = \frac{BR}{BC_x}$.

The line representing the actual velocity of R is Rr_1 which is the diagonal of the parallelogram of which Rr_6 and Rr_5 are sides.

Example 71. In the mechanism shown in Fig. 299, a wheel turning about the axis D has pinned to it at C a link connected to the end of the crank AB. The wheel also carries a pin E on which is a block. Through the block slides the rod RHF. The point H is connected to the pin B and the end F is attached to the slider. The wheel is turning at such an angular speed that the axes of the pins C and E have velocities represented by Cc_1 and Ee_1 respectively. Let it be required to find the line representing the velocity of any point as R on the rod RHF.

Solution. First find the velocity of B and resolve this velocity Bb_1 into components along and perpendicular to BH, thus getting Bb_3. The instantaneous axis of RHF lies somewhere on the perpendicular to XX through F but its exact position on this line is not yet known. Hence the velocity of H cannot be found as yet, H is a point which is common to BH and RHF and the component of its velocity along BH must be equal to Bb_3. Therefore the component along BH of the velocity of any point on RHF which lies along BH or BH produced must also equal Bb. (it being understood that the other component is perpendicular to BH). If RHF is assumed to be enlarged to include the point K where BH produced intersects the perpendicular to XX through F, then K, being a point on RHF lying along BH_3 will have the component Kk_3 equal to Bb_3. The actual velocity of K must be perpendicular to FK, hence Kk_1 is the velocity of K. Let E_x represent the point on the axis of RHF where it intersects the axis of the pin E. Then resolve Kk_1 into components perpendicular to and along KE_x getting Kk_4. Make E_xe_4 equal to Kk_4 and draw a perpendicular to E_xe_4 through e_4. Next resolve the velocity Ee_1 into components along and normal to the sliding, getting Ee_2 as the normal component. The normal component of the velocity of E_x must be the same as Ee_2 when paired with another component in the direction of the sliding. Hence the line E_xe_3 drawn to the intersection of e_xe_1 and e_4e_3 represents the actual velocity of E_x.

The instantaneous axis of RHF then is found at O. The velocity of R is therefore represented by Rr_1, perpendicular to OR and of such length that $\frac{Rr_1}{Kk_1} = \frac{OR}{OK}$.

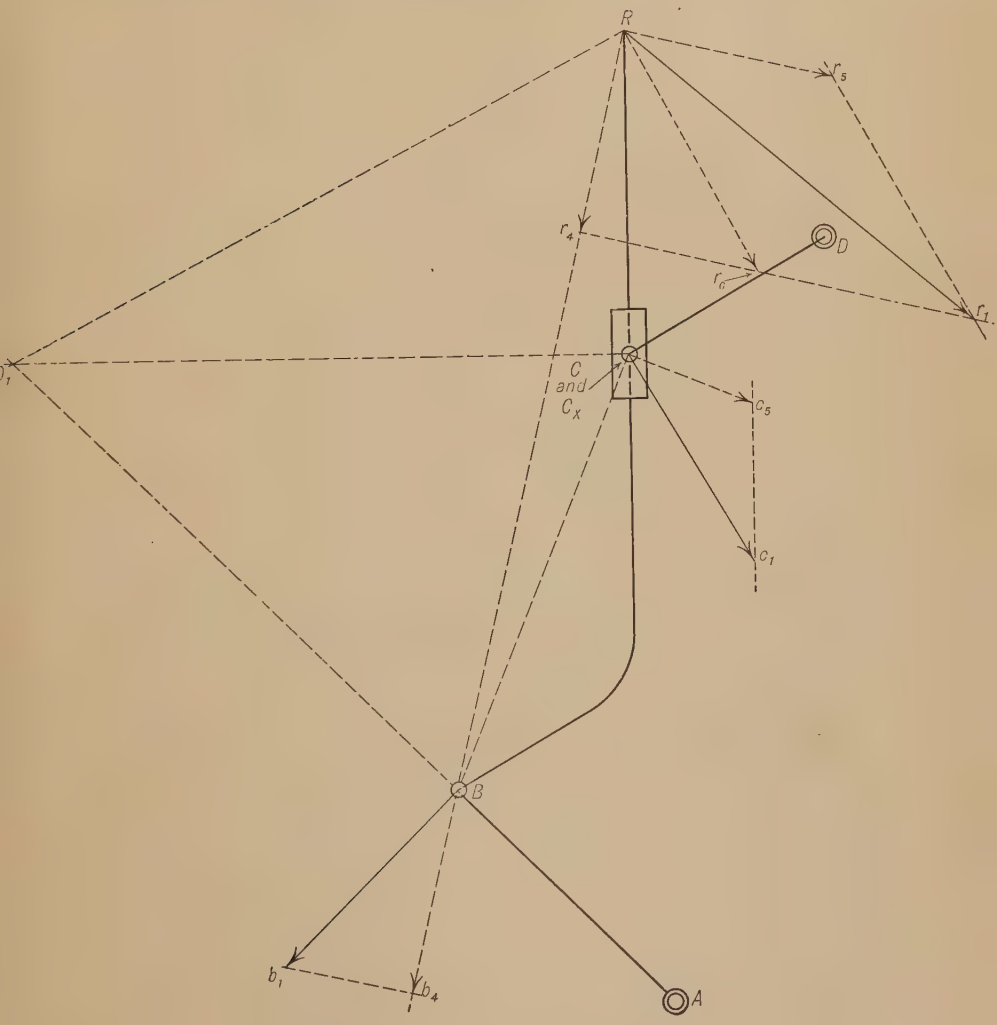

FIG. 298

Example 72. Rate of Sliding of Gear Teeth. To determine the rate of sliding of one gear tooth upon another at any position it will be necessary to find the linear velocity of the point of contact D (Fig. 300) in each of the teeth, and resolve these linear velocities into their components along the common normal and the common tangent. Let DE represent the linear velocity of D around O_1; the components of DE along the common normal and tangent are DF and DG respectively. The

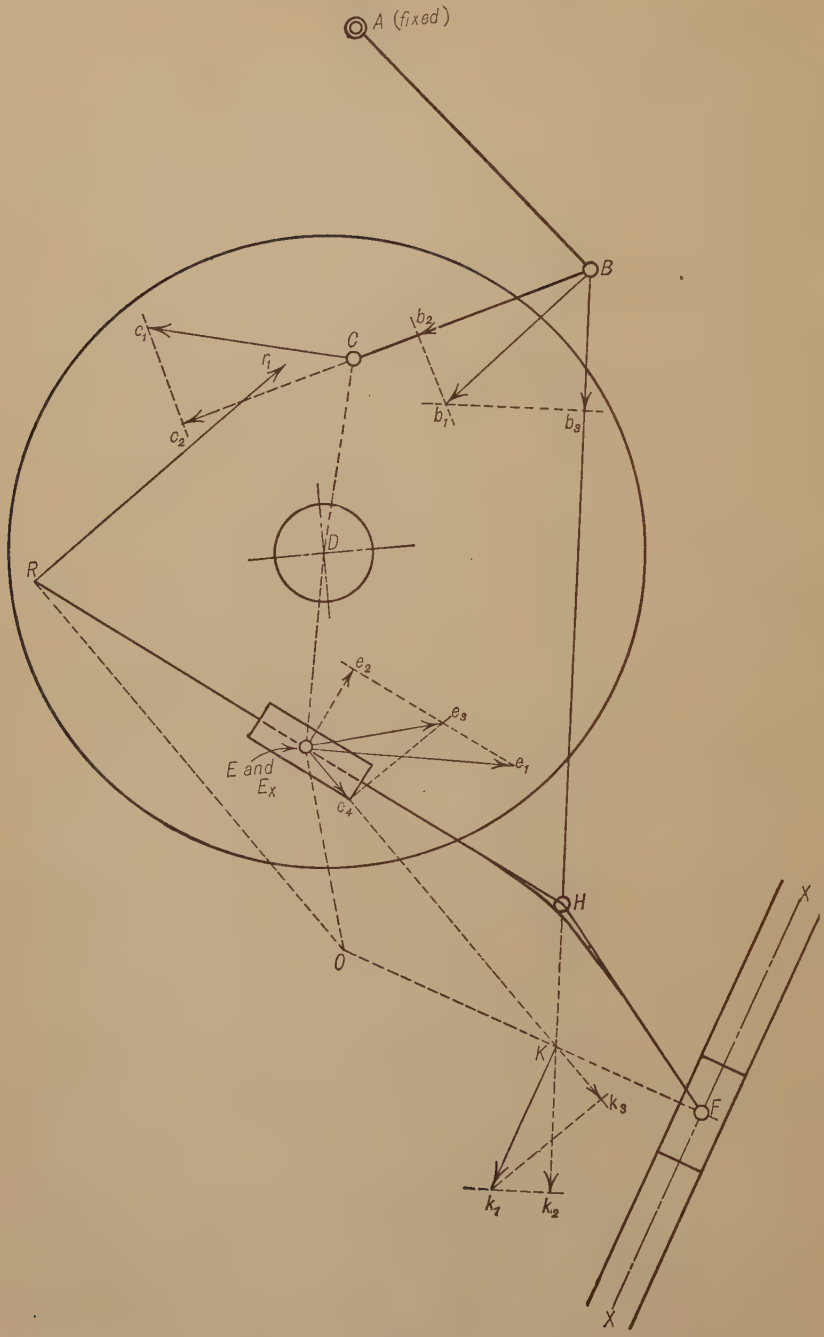

FIG. 299

direction of the motion of D around O_2 is along the line DH. To find the magnitude of its linear velocity we have DF as its component along the common normal, since this normal is the line of connection between the two sliding surfaces, and com-

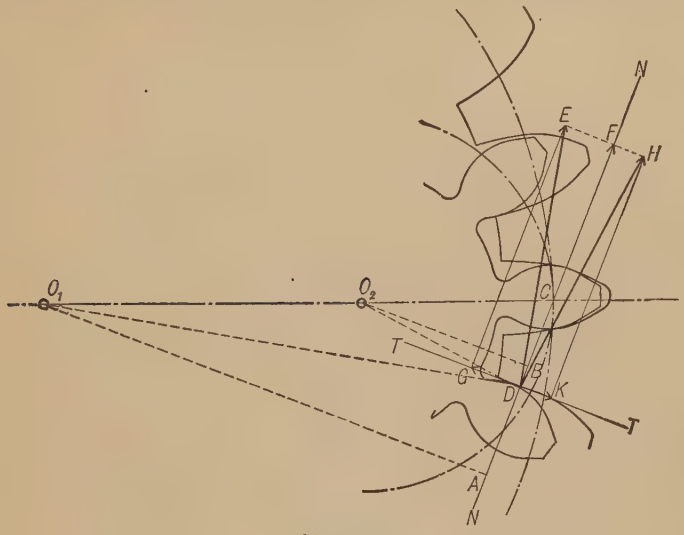

FIG. 300

ponents along the line of connection must be equal. This will give DH as the linear velocity of D around O_2, and DK as its component along the common tangent. The rate of sliding will be found to be GK, equal to $DG + DK$, since the components along the tangent act in opposite directions.

CHAPTER XI

LINKWORK

224. A Link may be defined as a rigid piece or a non-elastic substance which serves to transmit force from one piece to another or to cause or control motion.

For example, that part of a belt or chain running from the driven to the driving wheel, the connecting rod of an engine, the fluid (if assumed to be incompressible) in the cylinder of a hydraulic press, would be links according to the above definition. In ordinary practice, however, the name is applied to a rigid connector (see § 7), which may be fixed or in motion.

225. A Linkage consists of a number of pairs of elements connected by links. If the combination is such that relative motion of the links is possible, and the motion of each piece relative to the others is definite, the linkage becomes a **Kinematic Chain.** If one or more of the links in such a chain be fixed the chain becomes a **Mechanism** (see § 2).

In order that a linkage may constitute a kinematic chain, the number of fixed points or points whose motions are determined by means outside the particular linkage in question, must bear such a relation to the number of links in the linkage that the linkage may form a *four-bar linkage* or a *combination of two or more four-bar linkages.* (See § 210.) This may be seen by reference to Figs. 301, 277 and 302.

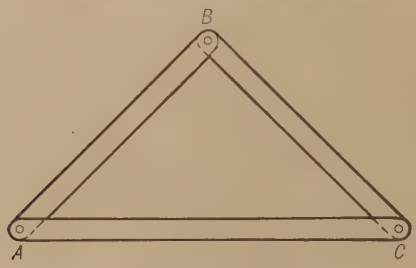

Fig. 301

The linkage in Fig. 301 consists of three links AB, AC, and BC, forming a triangle and it is apparent that no relative motion of the links can occur since only one triangle can be formed from three given lines.

On the other hand, if four links are involved, as in Fig. 277, relative motion of a definite nature will result. If now five links, as *AB*, *BC*, *CD*, *DE*, and *EA*, Fig. 302, constitute the linkage, any link, as *AE*, may be fixed; then *AB* and *ED* become cranks, but a given angular motion of the crank *AB* does not impart a definite resulting angular motion to

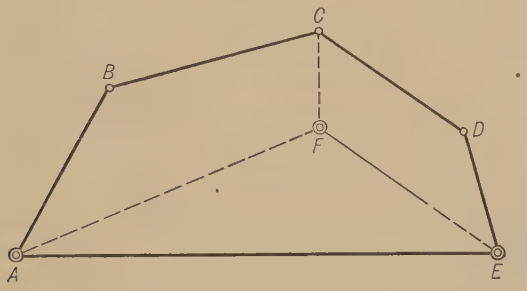

Fig. 302

DE unless the point *C* is guided by some external means. If, however, *C* is guided by the crank *FC* turning about the fixed center *F* the motions of all the links become determinate. But the linkage, by the addition of the crank *FC*, has now been transformed into a combination of two four-bar linkages, namely: *ABCF* and *FCDE* with *A*, *F*, and *E* fixed.

In general, it may be said that any mechanism may be analyzed as a four-bar linkage or as a combination of two or more such linkages.

226. The Four-Bar Linkage. In § 210 a four-bar linkage was described and special names were given to the links when one of them was fixed. It is not necessary that any link be absolutely at rest. The link *AD*, Fig. 277, which is there assumed to be fixed, may be attached to some other part of the machine which itself is in motion. *ABCD* remains a four-bar linkage and the *relative* motions of its four links are unchanged although, of course, the absolute motion of each link depends not only upon its motion with relation to the link (in this case *AD*) which is assumed to be fixed, but also upon the motion which that link has.

In view of that which has preceded, a four-bar linkage may be described as consisting of four cylindrical pairs of elements, or their equivalent, each element of each pair being connected by a rigid link, or its equivalent, to one of the elements of an adjacent pair. Thus, the pin *A*, Fig. 272, is connected by the fixed frame *E* to the pin *D*. The enlarged end of the crank *F* which contains the cylindrical hole paired with *A* is connected to one of the pair at *C*, and so on.

227. Relative Motion of the Links in a Four-Bar Linkage. Since, as shown in § 226, the motions of the links, relative to some one link assumed to be fixed, are not changed if motion is imparted to that link, it follows that the motion of any link, relative to any other link of the linkage, is the same whichever link is fixed. In other words, *the relative motions of the links of a four-bar linkage are independent of the fixedness of the links.* This principle is taken advantage of in the application of four-bar linkages, particularly in cases where centrodes are substituted for some of the links, as will be illustrated later.

The laws relating to the motions of the links can be studied more conveniently by assuming one link fixed, and this method will be followed in the succeeding paragraphs.

228. Angular Speed Ratio of Cranks. *The angular speeds of the two cranks of a four-bar linkage are inversely as the lengths of the perpendiculars or any two parallel lines drawn from the fixed centers to the center line of the connecting rod; also, inversely as the distances from the fixed centers to the point of intersection of the center line of the connecting rod and the line of centers (produced if necessary).*

This law may be shown to be true in two ways.

1°. By reference to the instantaneous axis of the connecting rod.

Let $ABCD$ (Fig. 303) represent the linkage, AD being the fixed link. To show that

$$\frac{\text{Angular speed of } DC}{\text{Angular speed of } AB} = \frac{Am}{Dn} = \frac{Ak}{Dk}.$$

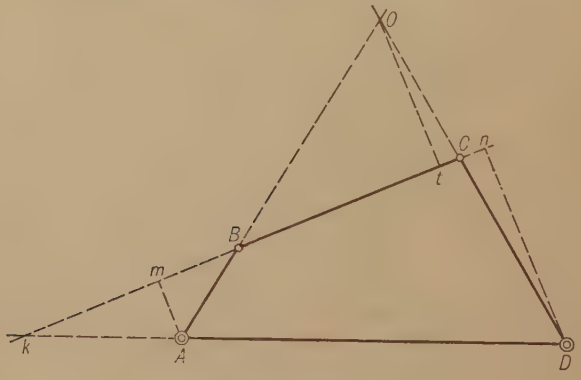

FIG. 303

The instantaneous axis of BC is at O and since the linear speeds of B and C are to each other as their distances from the instantaneous axis (see § 219)

$$\frac{\text{Linear speed } C}{\text{Linear speed } B} = \frac{OC}{OB}. \qquad \text{(I)}$$

But since the angular speed of DC is equal to the linear speed of C divided by the radius DC (see § 38) it follows that

$$\text{Angular speed } DC = \frac{\text{Linear speed } C}{DC}. \qquad \text{(II)}$$

Similarly

$$\text{Angular speed } AB = \frac{\text{Linear speed } B}{AB}. \qquad \text{(III)}$$

Dividing (II) by (III)

$$\frac{\text{Angular speed } DC}{\text{Angular speed } AB} = \frac{\dfrac{\text{Linear speed } C}{DC}}{\dfrac{\text{Linear speed } B}{AB}} = \frac{\text{Linear speed } C}{\text{Linear speed } B} \times \frac{AB}{DC}. \qquad \text{(IV)}$$

Whence, combining (I) and (IV),

$$\frac{\text{Angular speed } DC}{\text{Angular speed } AB} = \frac{OC}{OB} \times \frac{AB}{DC} = \frac{OC}{DC} \times \frac{AB}{OB}. \qquad \text{(V)}$$

Draw Ot, Dn and Am perpendicular to BC. Then, from the similar triangles OtC and DnC,

$$\frac{Ot}{Dn} = \frac{OC}{DC}.$$

Similarly

$$\frac{Am}{Ot} = \frac{AB}{OB}$$

Substituting these values in (V)

$$\frac{\text{Angular speed } DC}{\text{Angular speed } AB} = \frac{Ot}{Dn} \times \frac{Am}{Ot} = \frac{Am}{Dn}. \qquad (73)$$

Producing CB to meet DA at k, it will be noticed that triangles Dnk and Amk are similar, hence

$$\frac{Ak}{Dk} = \frac{Am}{Dn}.$$

Therefore, from equation (73),

$$\frac{\text{Angular speed } DC}{\text{Angular speed } AB} = \frac{Ak}{Dk}. \qquad (74)$$

In determining the speed ratio of the cranks for any specific case either equation (73) or (74) may be used as happens to be more convenient.

2°. By resolution of velocities. In Fig. 304 let Bb_1 represent the linear velocity of B. Then Bb_2 is the component of this velocity along CB and Cc_1 is the velocity of C.

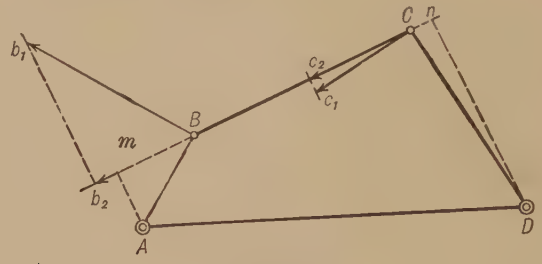

FIG. 304

Therefore
$$\frac{\text{Linear speed } C}{\text{Linear speed } B} = \frac{Cc_1}{Bb_1},$$

and since linear speed is equal to angular speed divided by the radius, and the triangles Cc_1c_2 and DCn are similar as are also Bb_1b_2 and ABm, this may be written

$$\frac{\text{Angular speed } DC}{\text{Angular speed } AB} = \frac{Cc_1}{DC} \div \frac{Bb_1}{AB} = \frac{Cc_2}{Dn} \times \frac{Am}{Bb_2}.$$

But
$$Cc_2 = Bb_2.$$

Hence the equation becomes

$$\frac{\text{Angular speed } DC}{\text{Angular speed } AB} = \frac{Am}{Dn},$$

as in (73).

This angular speed ratio of course varies for every relative position of the links; but if the perpendicular from the instantaneous axis to the center line of the connecting rod should fall at the intersection of the center line of the connecting rod and the line of centers, that is, in Fig. 303, if the points t and k should coincide, the angular speed ratio is essentially constant for slight movements in either direction. The same would be true should the points B and C be moving in lines parallel to each other.

229. Diagrams for Representing Changes in the Linear Speed Ratio or Angular Speed Ratio in Any Linkage. To obtain a clear knowledge of the change in velocity ratio in any linkage a diagram may be drawn where the abscissæ may represent successive positions of one of the oscillating links, and the ordinates represent the angular speed ratio of the oscillating links. A smooth curve through the points thus found would show clearly the fluctuations in the angular speed of one of the links relative to the other. A curve for linear speed ratio could be similarly plotted.

In the linkage shown in Fig. 305 let AB turn uniformly left handed; required a curve to represent the ratio $\frac{\text{angular speed } DC}{\text{angular speed } AB}$ for a complete rotation of AB. Take positions of AB at intervals of 30° and draw per-

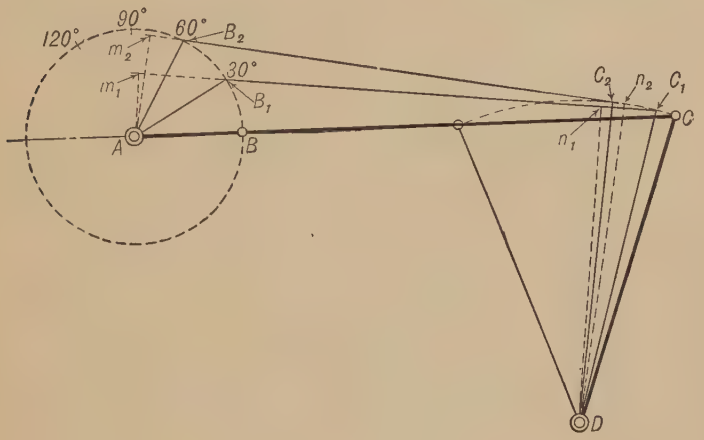

FIG. 305

pendiculars from D and A to BC in each of its positions. The ratio of the two perpendiculars in each position will give the angular speed ratio: thus, starting with AB as given in the figure,

$$\frac{\text{angular speed } DC}{\text{angular speed } AB} = 0;$$

in the position AB_1C_1D we have

$$\frac{\text{angular speed } DC}{\text{angular speed } AB} = \frac{Am_1}{Dn_1};$$

etc. Plotting these values as ordinates and the 30° positions of AB as abscissæ will give the curve shown in Fig. 306. Ordinates above the zero line indicate that the cranks turn in the same direction, while those below show that the directions of rotation are opposite.

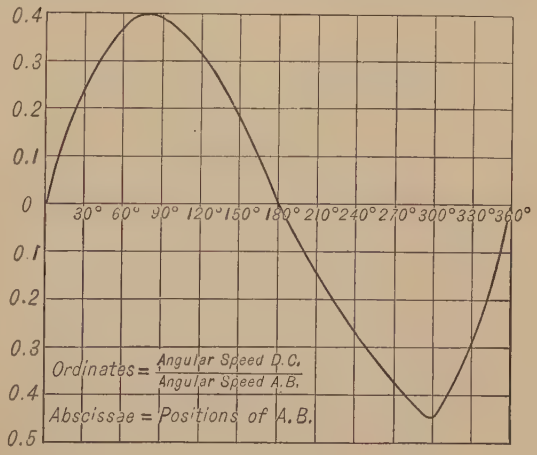

FIG. 306

230. Dead Points. A position in the cycle of motion of the driven crank of a linkage in which it is in line with the connecting rod, and

therefore cannot be moved by the connecting rod alone, is known as a **dead point**. If the driven crank makes complete revolutions there are two such positions in its cycle.

231. Crank and Rocker. Let the link AD (Fig. 307) be fixed, and suppose the crank AB to revolve while the lever DC oscillates about its axis D. In order that this may occur, the following conditions must exist.

1° $AB + BC + DC > AD$, 3° $AB + BC - DC < AD$,
2° $AB + AD + DC > BC$, 4° $BC - AB + DC > AD$.

1° and 2° must hold in order that any motion shall be possible; 3° can be seen from the triangle AC_2D in the extreme right position

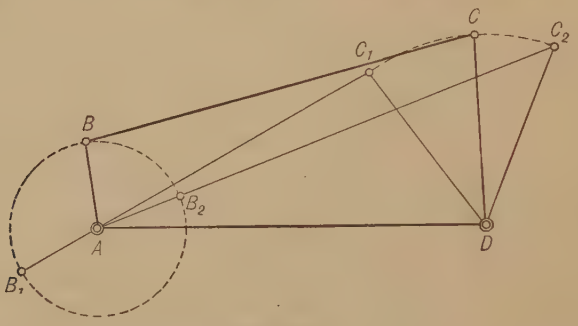

FIG. 307

AB_2C_2D, which must not become a straight line; and 4° can be seen from the triangle AC_1D, in the left extreme position AB_1C_1D.

There are two points C_1 and C_2 in the path of C at which the motion of the lever is reversed, and it will be noticed that if the lever DC is the driver, it cannot, unaided, drive the crank AB, as a pull or a thrust on the rod BC would only cause pressure on A, when C is at either C_1 or C_2. If AB is the driver, this is not the case.

The above form of linkage is applied in the beam engine as shown in Fig. 308, the fixed link AD being formed by the engine frame; corresponding parts are lettered the same as in Fig. 307. The instantaneous axis is, for the position shown, at O, and for the instant the linear speed of B is to the linear speed of C as OB is to OC, or as Bf is to Ce, the line ef, drawn parallel to BC, being made use of when the point O comes beyond the limits of the drawing.

The angle through which the lever DC (Fig. 307) swings can be calculated for known values of AB, BC, CD, and DA.

From the triangle AC_2D

$$\cos ADC_2 = \frac{\overline{DC}^2 + \overline{AD}^2 - (BC + AB)^2}{2\,(DC \times AD)}$$

and from the triangle AC_1D

$$\cos ADC_1 = \frac{\overline{DC}^2 + \overline{AD}^2 - (BC - AB)^2}{2\,(DC \times AD)}$$

and $$C_1DC_2 = ADC_2 - ADC_1. \qquad (75)$$

Thus the two angles ADC_2 and ADC_1 can be calculated, and their difference will give the angle required.

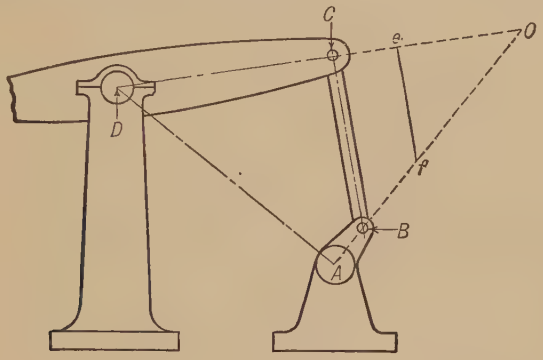

Fig. 308

If tne link BC is made stationary, the mechanism is similar, the only difference being in the relative lengths of the connecting rod and stationary piece or frame.

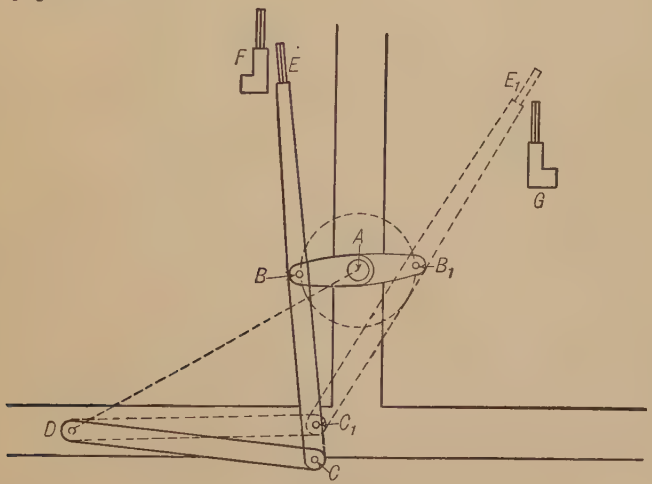

Fig. 309

Fig. 309 shows a case of the *crank and rocker* as applied in wool-combing machinery. Here the crank AB turns uniformly on its axis A, while CD oscillates about D; both axes A and D are attached to the

frame of the machine, which forms the fixed link AD. The connecting rod CB is prolonged beyond B, and carries a comb E at its extremity, which takes a tuft of wool from the comb F and transfers it to the comb G, both combs F and G being attached to the frame of the machine. The full lines show the position of the links when the comb E is in the act of rising through the wool on F, thus detaching it, and the dotted lines show the position of the links when the comb E_1 is about to deposit the tuft of wool on G. The same combination inverted is used in some forms of wool-washing machines.

232. Drag Link. If the link AB, in the linkage Fig. 307, is made the stationary piece or frame, as in Fig. 310, the links BC and

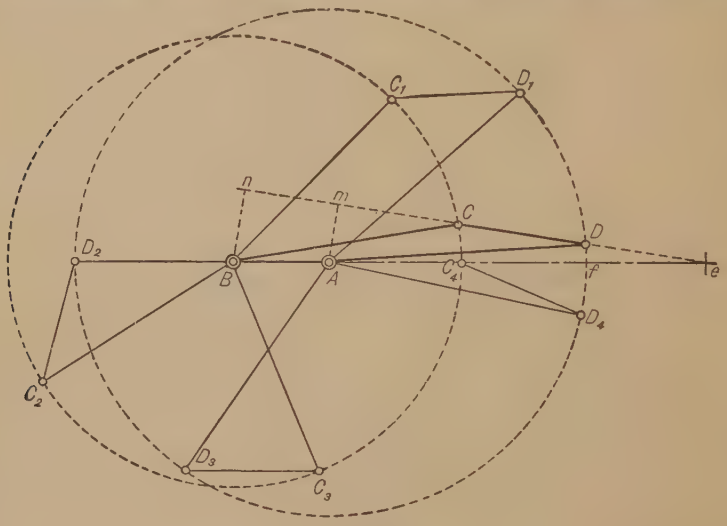

FIG. 310

AD revolve about B and A respectively, that is, become cranks, and CD becomes a connecting rod. This mechanism is known as the *drag-link*.

In order that the cranks may make complete revolutions, and that there may be no dead-points, the following conditions must hold:

1° Each crank must be longer than the line of centers, which needs no explanation.

2° The link CD must be greater than the lesser segment C_4f and less than the greater segment C_4D_2, into which the diameter of the greater of the two crank circles is divided by the smaller circle. This may be expressed as follows:

$$CD > AB + AD - BC \text{ (see triangle } AC_4D_4),$$
$$CD < AD + BC - AB \text{ (see triangle } BC_2D_2).$$

Producing the center line of the connecting rod until it intersects the line of centers at e, and dropping the perpendiculars Am and Bn upon it,

$$\frac{\text{Angular speed } AD}{\text{Angular speed } BC} = \frac{Be}{Ae} = \frac{Bn}{Am}.$$

In the positions ABC_1D_1 and ABC_3D_3, when CD is parallel to the line of centers, the angular speeds of AD and BC are equal, since the perpendiculars Bn and Am then become equal.

If BC revolves left-handed and is considered the driver, it will be noticed that between the positions ABC_3D_3 and ABC_1D_1 the crank AD is gaining on BC, and between ABC_1D_1 and ABC_3D_3 it is falling behind BC.

Fig. 311 shows an application of the drag link for driving the ram of a Dill slotter. The links in this figure are lettered to correspond with Fig. 310. The large gear, turning on a fixed boss, centered at B on the

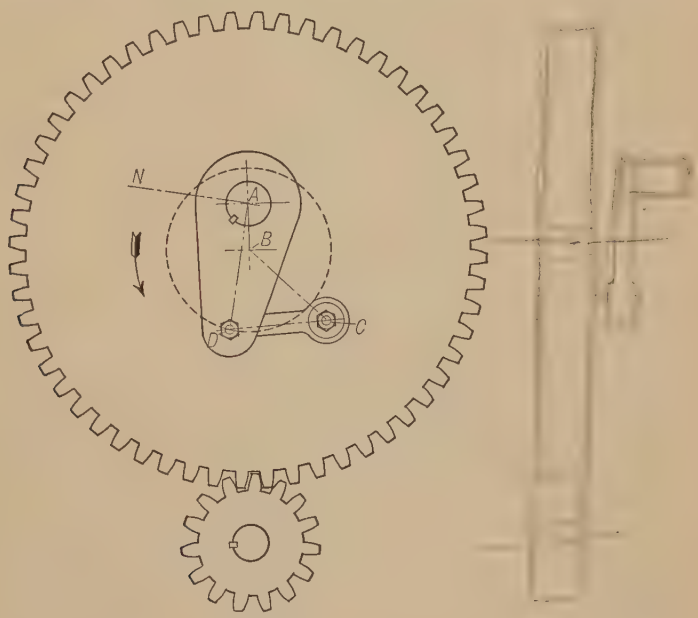

Fig. 311

frame, carries the pin C and forms the driving crank corresponding to BC, Fig. 310. The shaft A has its bearing in a hole in the large boss on which the gear turns and has keyed to it the crank arm AD. On the other end of this shaft is another crank arm, or its equivalent, the center line of which is AN. To this latter crank arm is attached the connecting rod which drives the ram. The mechanism is shown

in the position which it occupies when the ram is about at the middle of the downward or cutting stroke.

233. The Double Rocking Lever (Fig. 312) shows the same linkage with DC as the fixed link. In this case the cranks CB and DA merely oscillate on their axes C and D. The extreme positions may be assumed at A_1B_1 and A_2B_2.

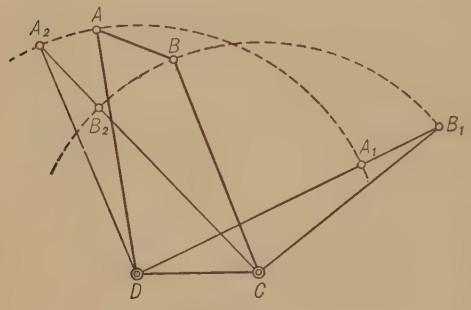

Fig. 312

234. Parallel Crank Four-Bar Linkage. In Fig. 313, the crank AB is equal in length to the crank CD and the line of centers AD is equal to the connecting rod BC. The center lines of the linkage thus form a parallelogram in every position, provided the cranks turn in the same direction. Therefore, the perpendiculars Am and Dn are always equal and the two cranks are always turning at the same angular speed. A familiar example of this linkage is furnished by the cranks and parallel rod of a locomotive. In this case the link formed by the center line of bearings in the frame carrying the axles of the two driving wheels corresponds to the line of centers, but is itself in motion.

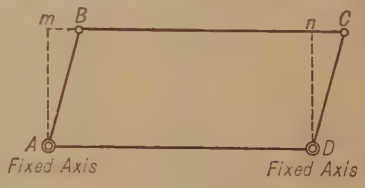

Fig. 313

235. Non-Parallel Equal Crank Linkage. In the linkage shown in Fig. 314, AB is equal to CD and AD is equal to BC. Provision is made, however, to cause the cranks to turn in opposite directions; in which case the perpendiculars Am and Dn do not remain equal to each other. Therefore, if the crank AB turns with uniform angular speed, the crank DC has a varying angular speed, although both make one complete turn in the same length of time.

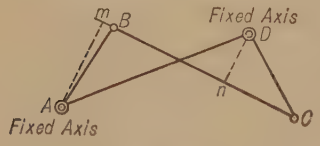

Fig. 314

The opposite directions of revolution may be secured by providing some means of causing the cranks to pass the dead points in the proper direction. This may be accomplished by means of some device placed at the instantaneous axis of the connecting rod when in these positions although the entire linkage may be replaced by gears whose pitch surfaces are the centrodes of two of the opposite links. If in the linkage

in Fig. 314, AD being the line of centers, the centrode of BC is drawn it will be found to be the hyperbola, part of which is shown in full lines in Fig. 315, with foci at A and D and transverse axis fg lying along the

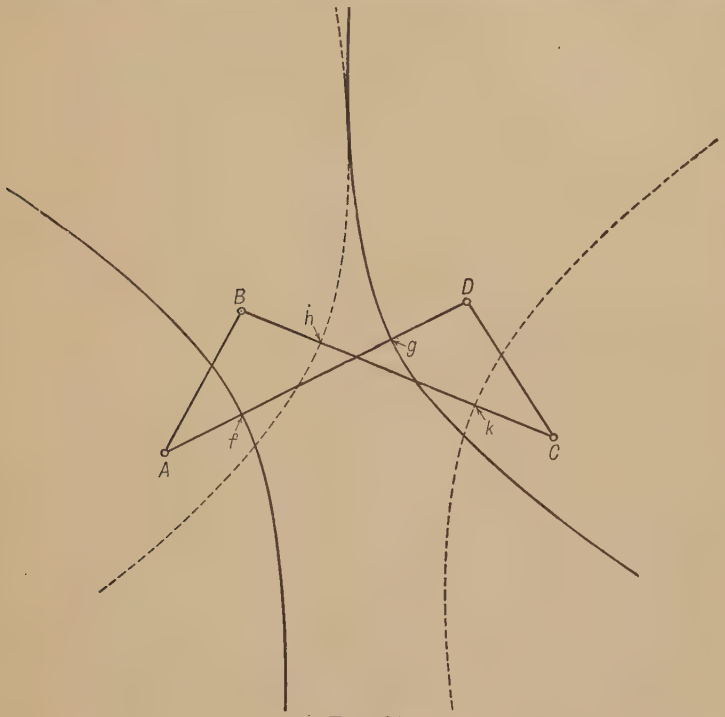

Fig. 315

fixed link AD and equal in length to $AB = DC$. Similarly, if BC is considered as the line of centers the centrode of AD is the hyperbola, part of which is shown in dotted lines in Fig. 315, with foci at B and C

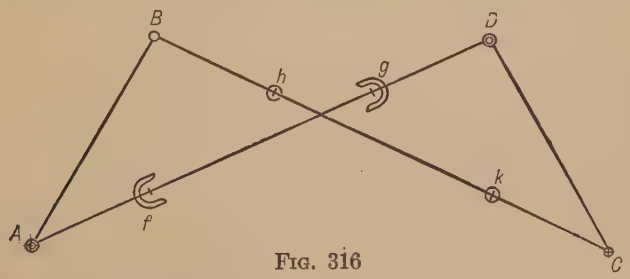

Fig. 316

and transverse axis hk lying along BC and equal in length to $AB = DC$. If, with A and D as the fixed centers, a pin is placed on the connecting rod BC at h (Fig. 316) and a corresponding open eye at g on the fixed

line AD, the points h and g being the same points as h and g in Fig. 315, the pin at h will mesh into the eye at g when the linkage reaches one dead point and thus insure that the cranks pass the dead point in the proper direction. A similar pin at k and eye at f will provide for passing the other dead point.

If the link DC is assumed to be the fixed link the centrode of AB is the ellipse N, Fig. 317, with foci at D and C and the length of the major

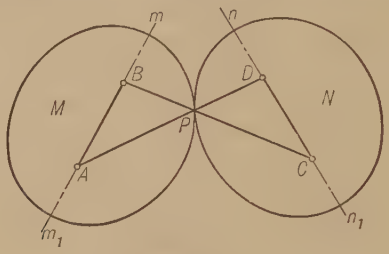

Fig. 317

axis is equal to $AD = BC$. Similarly if AB is assumed to be fixed the centrode of DC is the ellipse M with A and B as foci and with $AD = BC$ as the length of the major axis.

The ellipses being closed curves, it is possible to substitute for the links, short cylinders whose bases are of the form of the elliptical centrodes. Let it be supposed that two equal gears are made whose pitch surfaces are of the form of the ellipses shown in Fig. 317, and that these pitch ellipses are placed in contact with each other as in the figure. Links BC and DA may be attached to the gears at the foci of the ellipses, and if the gear N is held still and M rolled around it the links CB and DA will turnabout the centers C and D respectively and the line joining the foci A and B will have the same motion that it would have in the linkage. Or M may be pivoted at the focus A and N at the focus D and both allowed to turn, the result being the same as in the linkage with AD as the fixed link, AB and DC as cranks.

If the cranks are prolonged as shown in Fig. 318 and pins placed at n and m_1 with corresponding eyes at m and n_1, these points being the same as the points with corresponding letters in Fig. 317, a means is provided for passing the dead points if the links themselves are used.

If desired, one dead point may be passed by means of pin and eye on the elliptical centrodes and the other dead point by pin and eye on the hyperbolic centrodes. Or a few teeth on sectors of gears at these parts of the centrodes might be used in place of the pin and eye.

Elliptic gears designed on the above principles have been used to drive the rams of machine tools, such as slotters, so as to give a slow cutting stroke to the tool, and a quicker return stroke. In applying

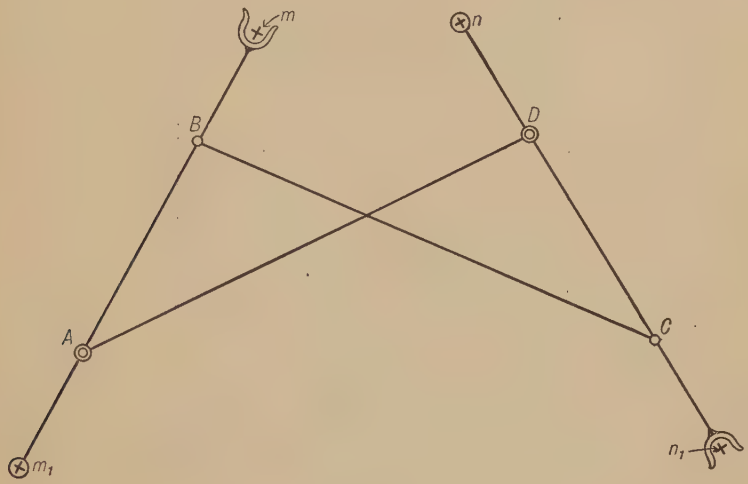

FIG. 318

the gears for such a purpose one of them, as, for instance, M, is on a shaft at A driven at a uniform speed from some external source of power. The other gear N is on a shaft at D to which is attached the crank or other device for moving the ram.

236. Slow Motion by Linkwork. The four-bar linkage can, if properly proportioned, be made to produce a slow motion of one of the cranks. Such a combination is shown in Fig. 319, where two cranks

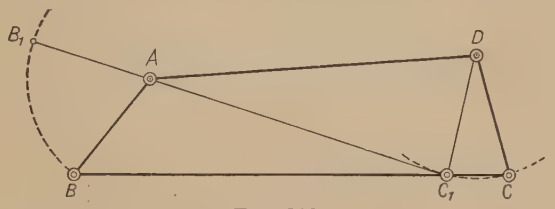

FIG. 319

AB and DC are arranged to turn on fixed centers and are connected by the link BC. If the crank AB is turned right-handed, the crank DC will also turn right-handed, but with decreasing speed, which will become zero when the crank AB reaches position AB_1 in line with the link BC_1 any further motion of AB will cause the link DC to return

toward its first position, its motion being slow at first and then gradually increasing. This type of motion is used in the Corliss valve gear, as shown in Fig. 320. The linkage *ABCD*, moving one of the exhaust

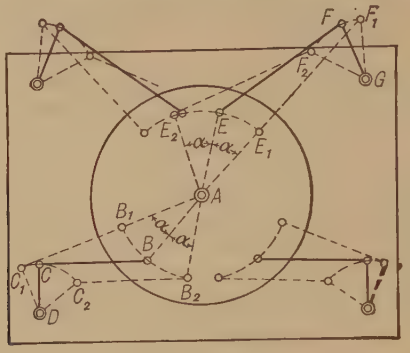

FIG. 320

valves, will give to the crank *DC* a very slow motion, when *C* is near C_1, when the valve is closed, while between *C* and C_2, when the valve is opening or closing, the motion is much faster. The same is true for the admission valves, as shown by the linkage *AEFG*.

237. Linkwork with a Sliding Pair. In Chapter X (§ 211) there was shown the relation between a linkage, such as the one in Fig. 321, and the simple four-bar linkage. It is important that this relation be clearly understood before proceeding and it is suggested that the reader review that discussion before studying what follows.

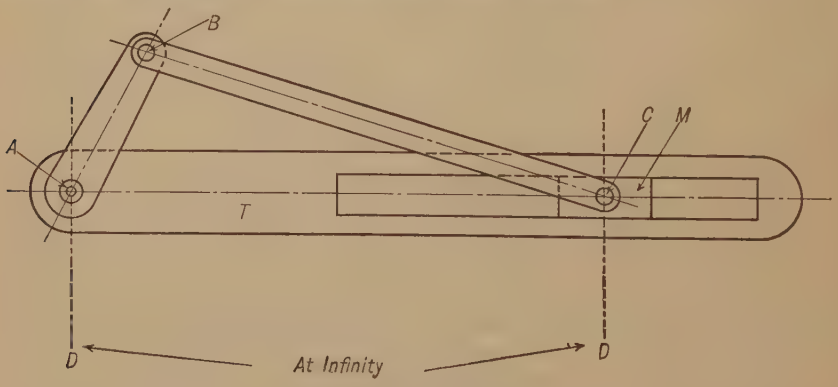

FIG. 321

Referring now to Fig. 321, the four links of the linkage are *AB*, *BC*, *CD* and *AD*, the lines *AD* and *CD* meeting at infinity, that is, being parallel, and perpendicular to the center line of the slot in *T*. It should be borne in mind that the piece *T* is not one of the links of the four-bar

linkage, but that T and the block pivoted to the link BC, replace, and constitute the equivalent of, the two infinite links AD and CD.

Four distinct mechanisms may be obtained from this form of the linkage by making each one of the links, in turn, the stationary link. These four mechanisms, with applications, will now be discussed.

238. The Sliding-Block Linkage. Considering the piece T (Fig. 321) as fixed gives the mechanism shown in Fig. 322 which is the

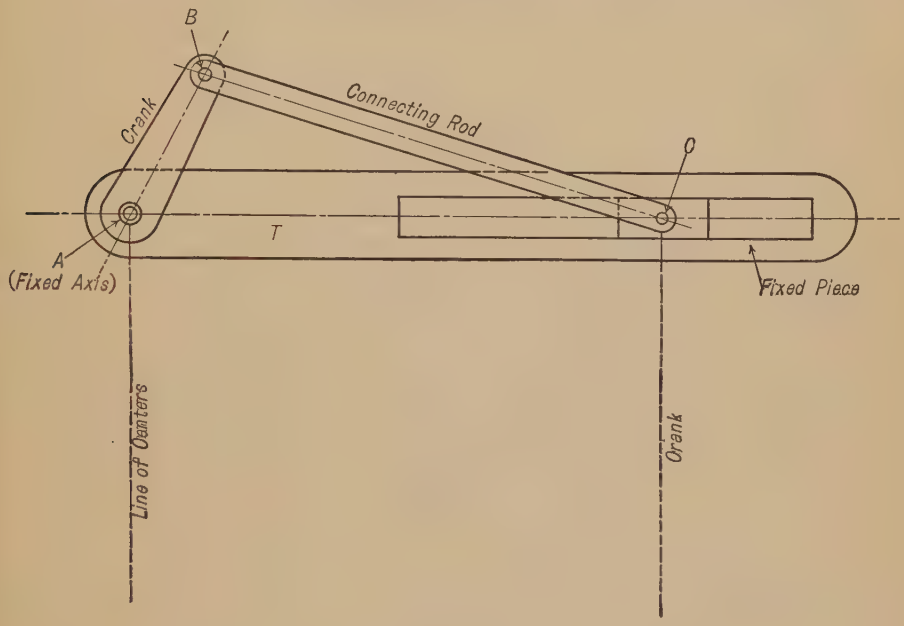

Fig. 322

mechanism commonly used in pumps and direct-acting steam engines. When employed in a steam engine, the block at C, called the crosshead, is the driver and the crank AB the follower; in a pump the reverse is the case.

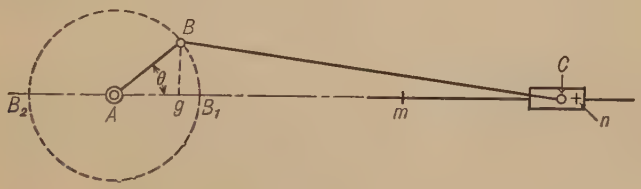

Fig. 323

Movement of Crosshead. In Fig. 323 let AB represent the crank, BC the connecting rod, and mn the path of the point C in the crosshead.

The travel of the crosshead mn is equal to twice the length of the crank AB and the distance of C from A varies between $BC + AB = An$ and $BC - AB = Am$, AB being the length of the crank, and BC the length of the connecting rod.

To find the distance the point C has moved from n, the beginning of its stroke or travel, let the angle made by the crank with the line An be represented by θ, and draw Bg perpendicular to An. The movement of the crosshead from the beginning of its stroke is, for the angular motion θ of the crank,

$$Cn = An - AC = An - (Ag + gc).$$

From the right triangle BCg

$$gC = \sqrt{\overline{BC}^2 - \overline{Bg}^2}.$$

Hence

$$Cn = An - AB\cos\theta - \sqrt{\overline{BC}^2 - \overline{AB}^2\sin^2\theta}$$

$$= AB + BC - AB\cos\theta - \sqrt{\overline{BC}^2 - \overline{AB}^2\sin^2\theta}, \qquad (76)$$

$$= AB(1 - \cos\theta) + BC\left\{1 - \sqrt{1 - \frac{\overline{AB}^2}{\overline{BC}^2}\sin^2\theta}\right\}. \qquad (77)$$

It will be noticed that Equation (77) indicates that the displacement differs from that which C would have if its motion were harmonic (assuming AB to turn with uniform speed) by the term

$$BC\left\{1 - \sqrt{1 - \frac{\overline{AB}^2}{\overline{BC}^2}\sin^2\theta}\right\}$$

(See Equation 5, page 7.)

and that the value of this term *decreases* as BC *increases* relative to AB. That is, the longer the connecting rod is made relative to the crank the more nearly the motion of the crosshead approaches harmonic motion.

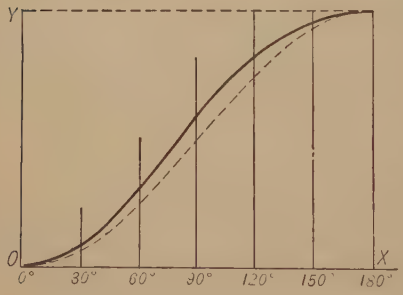

Fig. 324

The motion may be represented graphically by plotting a curve, where the ordinates represent successive values of Cn, and the abscissæ represent angular positions of the crank AB. Fig. 324 shows the curve for the linkage given in Fig. 328, the dotted line being the corresponding curve, if the motion of C were harmonic.

If a device similar to that shown in Fig. 325 is used, in which a rigid rod is attached to the crosshead, this rod having a slot in it at right

angles to the line of motion of the crosshead and embracing a block pivoted on the crank pin, then the crosshead would have harmonic motion if the crank turned at uniform speed.

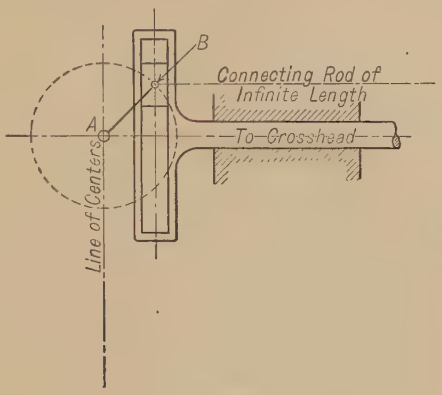

FIG. 325

This device is the equivalent of a connecting rod of infinite length, and the whole mechanism may be thought of as a four-bar linkage in which only one of the links, namely, the crank AB, is a finite quantity. The line of centers and the infinite connecting rod are indicated in the figure. The other crank is an imaginary line parallel to the line of centers at an infinite distance away.

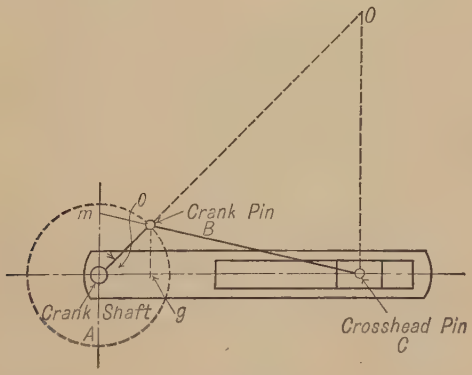

FIG. 326

Linear Speed of Crosshead. It is convenient to be able to determine the speed of the crosshead, and hence of the piston, of a steam engine for different positions of the stroke when the speed of the crank pin is known. In Fig. 326

$$\frac{\text{Linear speed of } C}{\text{Linear speed of } B} = \frac{OC}{OB}. \qquad (78)$$

Through A draw a line perpendicular to the center line of the slot, and extend the center line of the connecting rod to cut this line at m. Then the triangles OCB and mBA are similar. Hence,

$$\frac{OC}{OB} = \frac{Am}{AB}.$$

Substituting this in Eq. (78) gives

$$\frac{\text{Linear speed of } C}{\text{Linear speed of } B} = \frac{Am}{AB}; \tag{79}$$

or in words, *The linear speed of the crosshead or piston of a steam engine is to the linear speed of the crank pin as the distance between the crank shaft and the point where the connecting rod cuts the perpendicular through the center of the crank shaft is to the length of the crank.*

From the similar triangles CAm and CgB

$$\frac{Am}{gB} = \frac{AC}{gC} \quad \text{or} \quad Am = gB\frac{AC}{gC} = gB\frac{Ag + gC}{gC}.$$

Whence

$$Am = \frac{AB \sin\theta \left\{AB\cos\theta + \sqrt{\overline{BC}^2 - \overline{AB}^2 \sin^2\theta}\right\}}{\sqrt{\overline{BC}^2 - \overline{AB}^2 \sin^2\theta}}.$$

Substituting this value in (79) gives

$$\frac{\text{Linear speed of } C}{\text{Linear speed of } B} = \sin\theta + \frac{AB \sin\theta\cos\theta}{\sqrt{\overline{BC}^2 - \overline{AB}^2 \sin^2\theta}}. \tag{80}$$

This same result may be derived by another method. Let v represent the speed of the crosshead, s its displacement, and t the time during which the displacement has taken place.

Then $v = \dfrac{ds}{dt}$. (See Equation (2), § 25.)

Letting ω represent the angular speed of AB in radians per unit of time and expressing θ as ωt, Equation (76) may be written

$$s = AB + BC - AB\cos\omega t - \sqrt{\overline{BC}^2 - \overline{AB}^2 \sin^2\omega t}.$$

Therefore

$$\text{Linear speed of } C = \frac{ds}{dt} = \omega AB \sin\omega t + \frac{\omega\overline{AB}^2 \sin\omega t\cos\omega t}{\sqrt{\overline{BC}^2 - \overline{AB}^2 \sin^2\omega t}}. \tag{81}$$

But the linear speed of $B = \omega AB$.

$$\text{Therefore } \frac{\text{Linear speed of } C}{\text{Linear speed of } B} = \sin\omega t + \frac{AB \sin\omega t\cos\omega t}{\sqrt{\overline{BC}^2 - \overline{AB}^2 \sin^2\omega t}}. \tag{82}$$

When $\theta = 90°$, $Am = AB$ and the speeds of C and B are equal. To find other values of θ, when C and B have equal speeds; from Equation (80),

$$1 = \sin\theta + \frac{AB \sin\theta \cos\theta}{\sqrt{\overline{BC}^2 - \overline{AB}^2 \sin^2\theta}}.$$

Solving this for $\sin\theta$ gives

$$\text{Sin}\,\theta = \frac{BC}{4\,\overline{AB}^2}\left\{-BC \pm \sqrt{8\,\overline{AB}^2 + \overline{BC}^2}\right\}. \qquad (83)$$

The linear speed ratio between C and B may be shown graphically, using coördinate axes, the ordinates representing the ratio and the abscissæ representing angular positions of the crank AB. Fig. 327 shows the curve for the linkage given in Fig. 328.

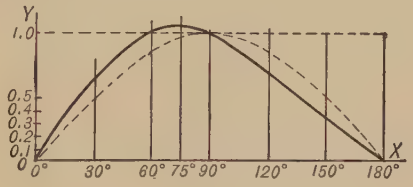

Fig. 327

Fig. 328 illustrates other methods of showing the linear speed ratio. In this figure the constant linear speed of B is represented by the crank length AB. From Equation (79)

$$\frac{\text{Linear speed } C}{\text{Linear speed } B} = \frac{Am}{AB}.$$

Therefore, by laying off on the line AB, which shows the crank position, the distance $At = Am$, and repeating this construction for a

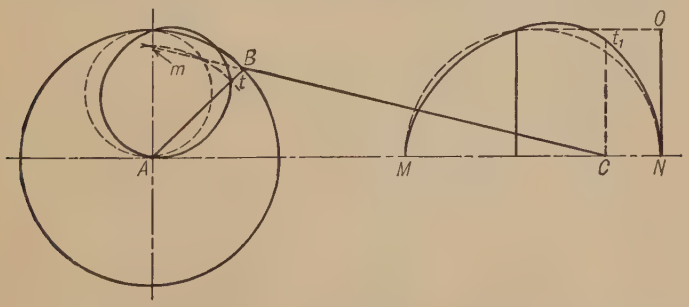

Fig. 328

sufficient number of crank positions, the full curve AtA will be obtained where the intercept At on the crank line shows the velocity of C, AB being the constant velocity of B. A similar curve would be found for

the crank positions below the line MA. Similarly the full curve Nt_1M might be obtained by laying off on the successive perpendiculars drawn through the point C the corresponding distances Am. The dotted curves are the corresponding curves for harmonic motion and are circular.

If, in Fig. 326, the crank AB is the driver, it can always produce reciprocating motion in the block at C; but if the block is the driver, it cannot produce continuous circular motion unless some means of passing the dead points be employed. This is usually accomplished in steam engines by attaching to the crank shaft a heavy fly wheel, the momentum of which carries the crank by the dead points. The impossibility of starting at the dead points still remains.

To obviate this difficulty two crank and connecting-rod mechanisms may be combined, as shown in Fig. 329, where the cranks are placed

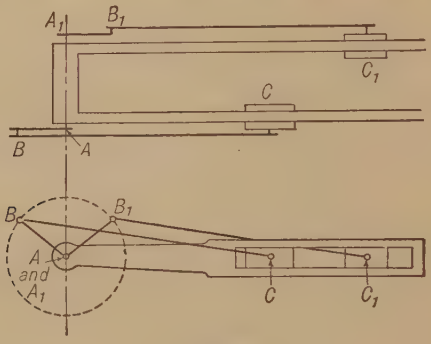

FIG. 329

at right angles to each other and joined by a shaft. This combination is employed in locomotives, and in hoisting and marine engines, one crank being very near its best position to be acted on by the rod while the other is at a dead point.

Fig. 330 shows another method of passing the dead points sometimes used in marine engines. Here the two connecting rods BC and BC_1 are located in parallel planes and act upon the same crank AB. By suitably forming the ends of the rods, they might be located in the same plane.

Acceleration of Crosshead. Since (from Equation (4)) $a = \frac{dv}{dt}$, where a represents the acceleration, v the linear speed and t the time, Equation (81) may be differentiated giving

$$a = \frac{d}{dt}\left(\omega AB \sin \omega t + \frac{\omega \overline{AB}^2 \sin \omega t \cos \omega t}{\sqrt{\overline{BC}^2 - \overline{AB}^2 \sin^2 \omega t}}\right)$$

$$= \omega^2 AB \cos \omega t + \frac{\omega^2 \overline{AB}^2 (\cos^2 \omega t - \sin^2 \omega t)}{(\overline{BC}^2 - \overline{AB}^2 \sin^2 \omega t)^{\frac{3}{2}}} + \frac{\omega^2 \overline{AB}^4 \sin^2 \omega t \cos^2 \omega t}{(\overline{BC}^2 - \overline{AB}^2 \sin^2 \omega t)^{\frac{3}{2}}}. \quad (84)$$

The acceleration may be found with a fair degree of accuracy graphically by plotting a velocity curve as shown in Fig. 331 in which the abscissæ are linear distances representing time (for example, each space may represent one second) and the ordinates are the corresponding

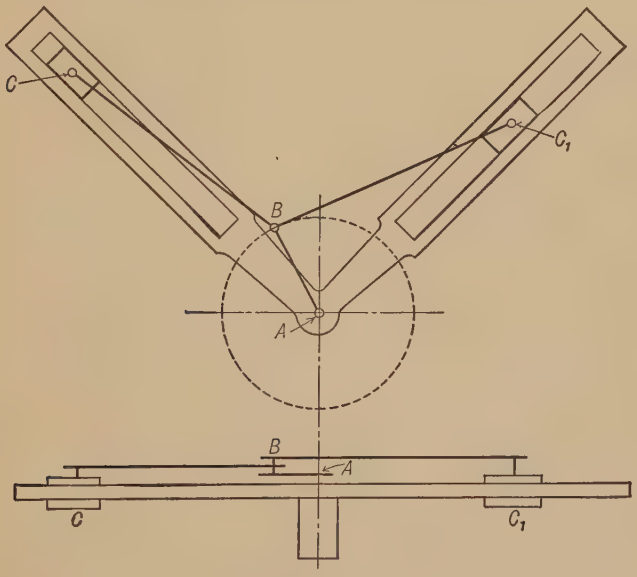

Fig. 330

velocities of C. Then if a tangent be drawn at any point as k and this tangent is made the hypotenuse of a right triangle kpd whose base is parallel to xx and equal to the distance which represents one time

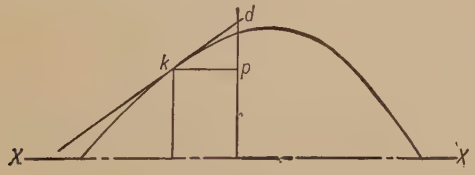

Fig. 331

unit, then the altitude pd represents the acceleration, at the same scale at which the velocity ordinates were plotted. In other words, the slope of the tangent to the velocity-time curve represents the acceleration.

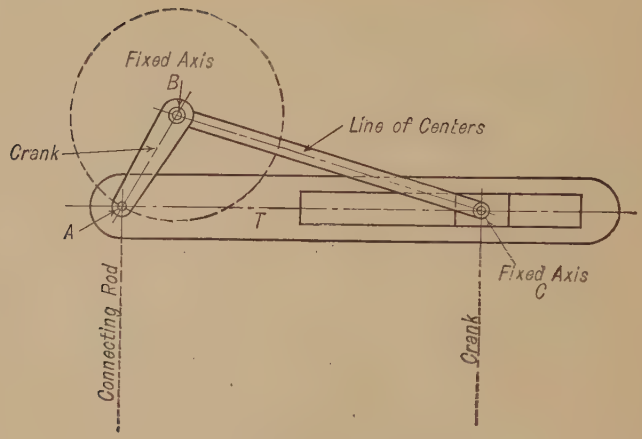

FIG. 332

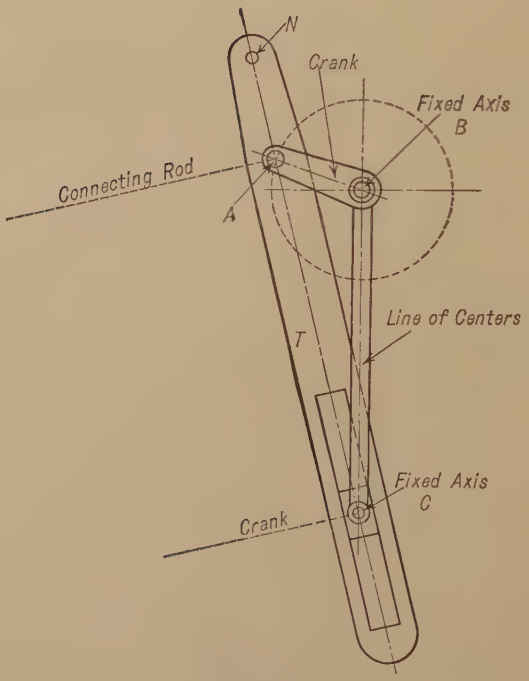

FIG. 333

239. Swinging or Rocking Block Four-Bar Linkage. Referring to Fig. 321, if, instead of considering the piece T as stationary, giving the four-bar linkage already discussed, the piece BC is made stationary, the linkage becomes that shown in Fig. 332. Here BA is a crank but A is now the crank pin. The pin C is a fixed axis with the block swinging on it. As the crank BA revolves the piece T oscillates and, at the same time, slides back and forth over the block.

This mechanism is applied in a modified form as a quick return motion in certain machine tools, particularly shapers. Fig. 333 is the same as Fig. 332, drawn with the line BC vertical and with the piece T extended with a connection at N to drive the ram of the shaper. The apparent objection to using the mechanism in this form is that the point N moves up and down at the same time that it swings. The only real purpose of the sliding of the piece T over the block is to allow the distance between A and C to change as the crank BA revolves. This is accomplished equally well if the block is pivoted on the pin A and the arm T swings on a pin at C, as shown in Fig. 334. Fig. 335 shows one way in which the mechanism is actually used. The crank BA is in this case the gear M. A is a pin fast to M and carries a block which works in a slot in T. M is driven by the pinion K. The link H connects N to the ram R which carries the cutting tool. The length of the crank BA may be changed by turning the screw S, thus changing the length of stroke of the tool.

Ratio of Time of Cutting Stroke to Time of Return Stroke. Fig. 336 represents, in diagrammatic form, the mechanism of Fig. 335. The driving crank BA turns right-handed as shown by the arrow. When the linkage is in the position CN_1R_1 the tool slide R is about to start on the cutting stroke. It makes this stroke while CN turns through the angle N_1CN or BA turns through the angle α. Similarly, R makes its return stroke while BA is turning through the angle β. If BA is assumed to turn at a uniform angular speed it follows that

$$\frac{\text{Time required for cutting stroke}}{\text{Time required for return stroke}} = \frac{\alpha}{\beta}.$$

Angular Speed of Swinging Arm. The angular speed of the swinging arm CN for any position as CN_2 may be found by the principle of §228, remembering that the infinite crank at C is always perpendicular to CN.

From Equation (73)

$$\frac{\text{Angular speed } CN_2}{\text{Angular speed } BA} = \frac{Bm}{CA_2}.$$

FIG. 335

FIG. 334

Then if the angular speed of BA_2 is assumed to be one radian per unit of time

$$\text{Angular speed of } CN_2 = \frac{Bm}{CA_2}. \tag{85}$$

Linear Speed of N. Since the linear speed of a point on a swinging arm is equal to the angular speed of the arm multiplied by the distance of the point from the axis, the linear speed of N_2 becomes, from Equation (85),

$$\text{Linear speed } N_2 = CN_2 \times \frac{Bm}{CA_2}. \tag{86}$$

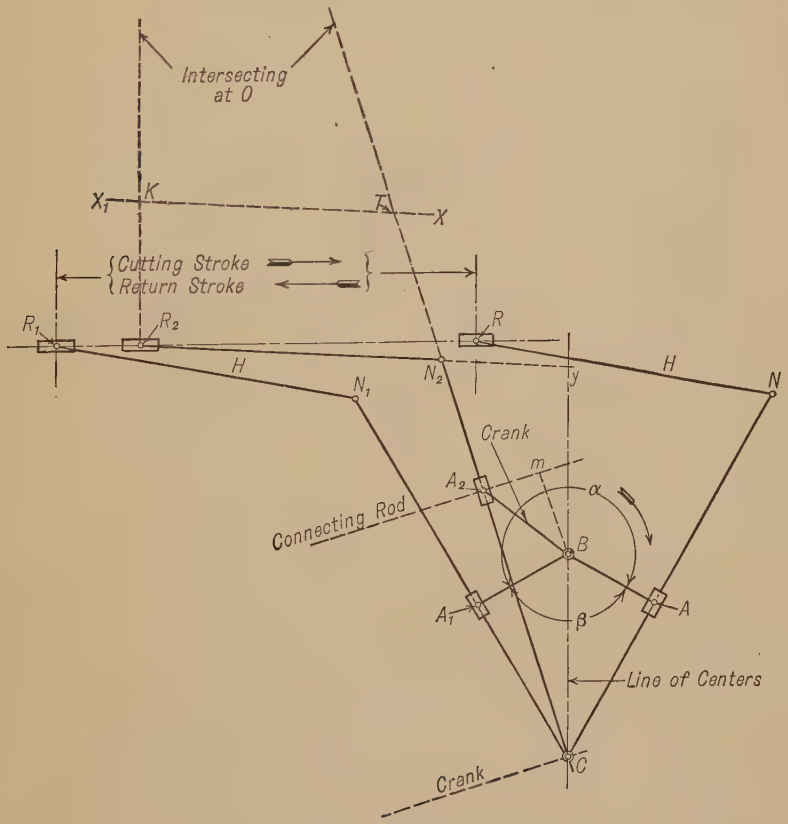

FIG. 336

Linear Speed of Tool Slide. If the point of intersection of CN_2 and the perpendicular to R_1R at R_2 (which in this case falls outside the limits of the drawing) is represented by the letter O, then O is the instantaneous axis of N_2R_2 and

$$\frac{\text{Linear speed of } R_2}{\text{Linear speed of } N_2} = \frac{OR_2}{ON_2}. \tag{87}$$

By drawing XX_1 parallel to R_2N_2, Equation (87) may be written

$$\frac{\text{Linear speed of } R_2}{\text{Linear speed of } N_2} = \frac{KR_2}{TN_2}. \tag{88}$$

Substituting in (88) the linear speed of N_2 obtained in (86) gives

$$\text{Linear speed of } R_2 = CN_2 \times \frac{Bm}{CA_2} \times \frac{KR_2}{TN_2}. \tag{89}$$

When, as is usually the case, R_1R is perpendicular to CB, the triangle N_2Cy, formed by the intersection of R_2N_2 (produced if necessary), with CB produced, is similar to triangle R_2ON_2, therefore

$$\frac{OR_2}{ON_2} = \frac{Cy}{CN_2}.$$

Hence Equation (87) may be written

$$\frac{\text{Linear speed of } R_2}{\text{Linear speed of } N_2} = \frac{Cy}{CN_2} \tag{90}$$

or

$$\text{Linear speed of } R_2 = CN_2 \times \frac{Bm}{CA_2} \times \frac{Cy}{CN_2} = \frac{Bm}{CA_2} \times Cy. \tag{91}$$

It should be remembered that Equation (89) is general and that Equation (91) applies only when the path of the tool slide is perpendicular to the line of centers CB. From each of the Equations (89) and (91) the actual linear speed of the tool slide is obtained by multiplying the right-hand side of the equation by the angular speed of the driving crank, BA, expressed in radians per unit of time.

FIG. 337

Oscillating Engine. Fig. 337 shows in diagrammatic form a type of engine, known as an oscillating engine, which still further illustrates the application of the swinging block linkage. Here the crank pin A

is connected directly to the end of the piston rod, and turning is made possible by pivoting the cylinder on trunnions at C. The links of the equivalent four-bar linkage are indicated in the figure.

240. Turning Block Linkage. If BA (Fig. 321) is made the fixed link, the four-bar linkage becomes that shown in Fig. 338. Here BC is a crank turning about B and causing T to turn about A. The ratio of

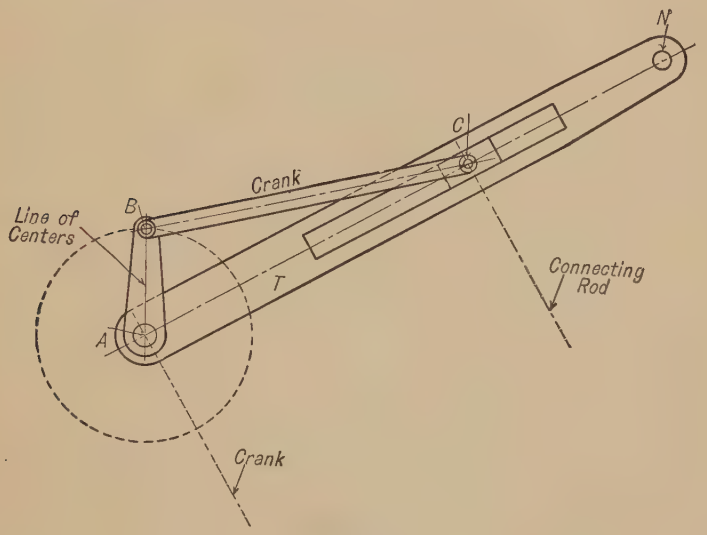

FIG. 338

the angular speed of T to that of A is variable, since the ratio of the perpendiculars from B and A to the center line of the theoretical connecting rod varies.

Whitworth Quick Return is the name given to the linkage when it is used as a quick-return mechanism, as in Fig. 339. If the crank BC (Fig. 339) turns uniformly right-handed from the position C_1 to the position C_2, the slide R will travel from its extreme position at the right to the end of its stroke at the left; and while BC turns from C_2 to C_1, the slide R returns

$$\therefore \frac{\text{Time of cutting stroke of } R}{\text{Time of return stroke of } R} = \frac{\alpha}{\beta}.$$

To locate the center A, given the time ratio of cutting stroke to return stroke, the line of centers, the axis B and the crank BC; make the angle C_1BA equal to $\frac{\beta}{2}$, where $\frac{\alpha}{\beta} = \frac{\text{time of cutting stroke}}{\text{time of return stroke}}$, and draw C_1A through C_1 perpendicular to the line of centers; the point A

is the axis of the link AN. If the stroke of the slide R is not on a line passing through A, but below it, as is commonly the case, the time ratio of cutting stroke to return stroke would be somewhat different from the above.

The ratio of angular speeds of AN and BC and the linear speed of R for any position of the mechanism may be found by a method corre-

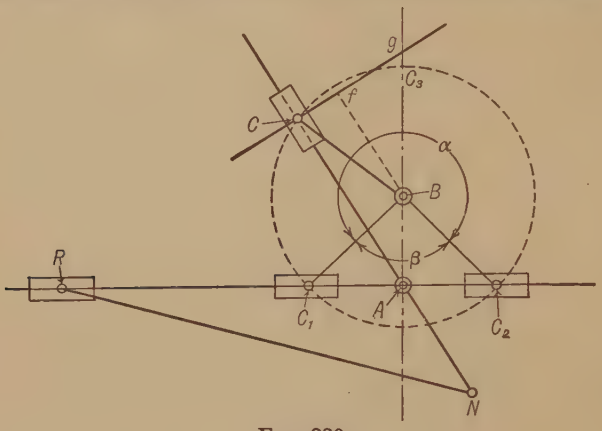

FIG. 339

sponding to that used for the swinging block quick return, described in § 239.

It will be noticed that this is similar in appearance to the swinging block mechanism shown in Figs. 333 and 334, except that in this case the driving crank is longer than the line of centers, so that the piece T

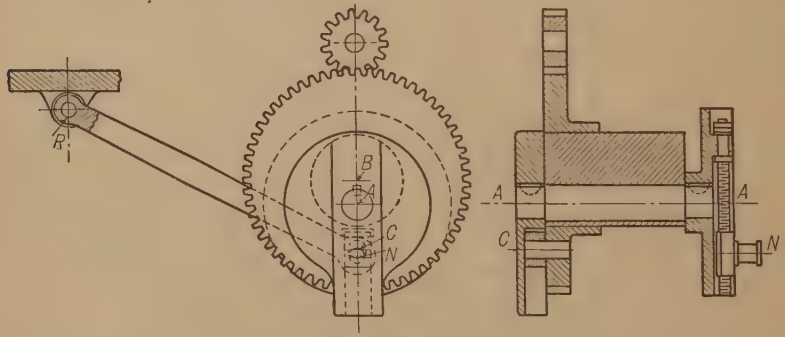

FIG. 340

makes a complete revolution when BC turns once, whereas the arm T in Figs. 333 and 334 merely oscillates.

Fig. 340 shows in more detail the manner in which this mechanism is actually applied.

241. Sliding-Slot Linkage. If the block, Fig. 321, is fixed to the frame so that it can neither turn nor slide, the resulting mechanism is as indicated in Fig. 341. The link CB becomes a crank oscillating about

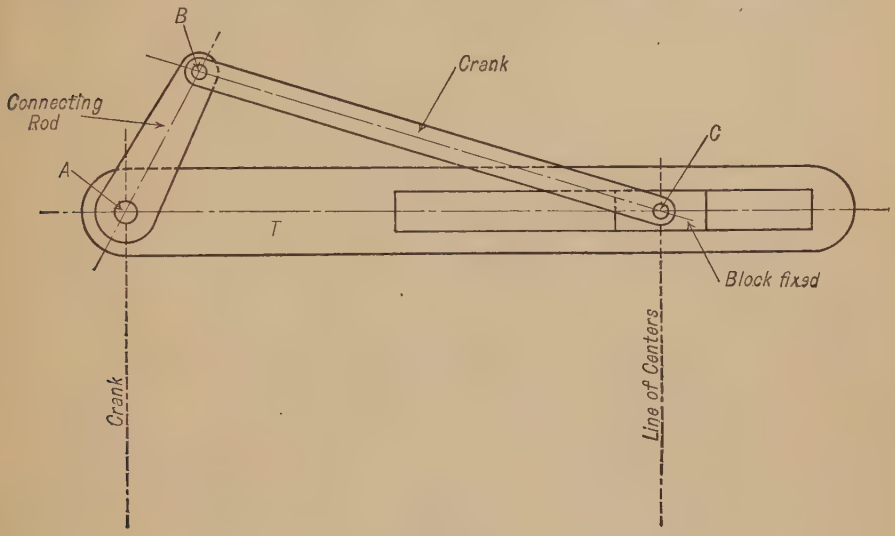

FIG. 341

the fixed axis C. The connecting rod BA may make complete turns about the axis A, at the same time that A moves in a straight line, carrying T with it. If BA makes a complete turn relative to A the stroke of T is equal to $2\,BA$.

Fig. 342 illustrates a manner in which this mechanism may be applied. The parts are lettered to correspond with Fig. 341. The worm wheel

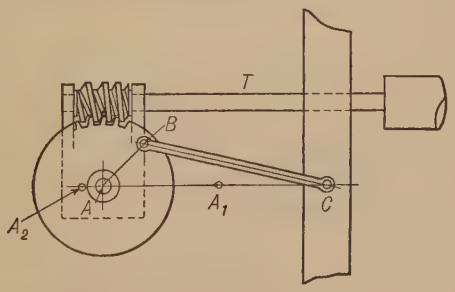

FIG. 342

carrying the pin B forms the connecting rod. This wheel may be made to rotate about the axis A by a worm keyed to the shaft T. The worm and wheel are kept in contact by a piece which supports the bearing of A, hangs from the shaft T, and confines the worm between its bearings.

A rotation of the shaft T will turn the worm wheel, causing a reciprocation of the axis A, and consequently of the driving shaft T, through a distance equal to twice AB.

Fig. 342a is another application of this linkage.

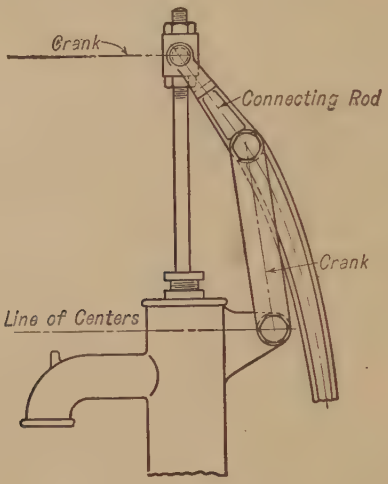

Fig. 342a

242. Expansion of Elements in the Linkages with One Sliding Pair. In the preceding discussions no consideration has been given to the diameters of the cylindrical pairs of elements included in the linkages, nor to the size and form of the links themselves, except as they were touched on incidentally in illustrating the manner of applying some of the mechanisms, as in Figs. 335, 340 and 342.

Alterations in the diameters of the pairs do not affect the relative motions. Also a change in shape or size of the links does not alter the relative motions, so long as the center lines of the elementary links remain unchanged, and yet such change may make the action of the linkage possible. Since enlargements of the elements of the cylindric pairs and changes in the form of the links sometimes conceal the real nature of the mechanism and cause much indistinctness, it will be well to consider a few cases here.

The sliding-block linkage of Fig. 332 will first be considered. Each of its links is more or less closely connected with its three cylindric pairs, and their forms are therefore dependent upon the relative sizes of the latter, although this size does not affect the nature of their relative motion. Evidently the combination is not altered kinematically, if the diameter of the crank shaft is increased so as to include the crank

pin as shown in Fig. 343, where the different links are lettered the same as in Fig. 332. S is the enlarged shaft whose center is A. The open cylinder of the fixed piece T must be enlarged to the same extent as the shaft, so that the pair is still closed.

This arrangement is used in practice, in some slotting and shearing machines, to work a short-stroke pump from the end of an engine

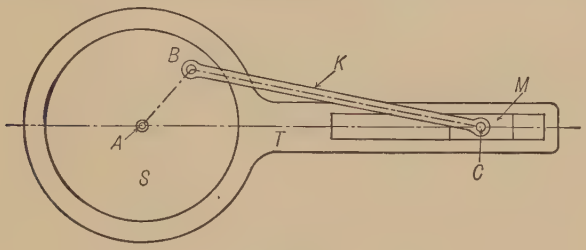

Fig. 343

shaft; and in other cases where a short crank forms one piece with its own shaft.

If the crank pin is enlarged until it includes the shaft, the result is the common **eccentric and eccentric rod** shown in Fig. 344. Here

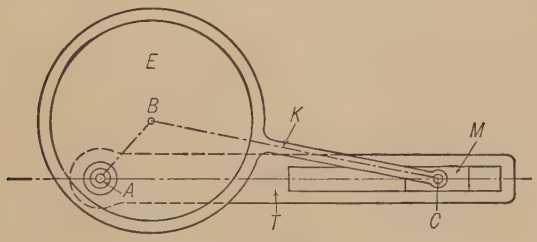

Fig. 344

the eccentric is E and is in reality a circular disk with center at B, made fast to the crank shaft so that it revolves with the shaft about the axis A. The length of the equivalent crank AB is called the **eccentricity.** This mechanism, which differs in form only from the common crank and connecting rod, is much used to operate the valve mechanism in steam engines, where it is necessary to obtain a reciprocating motion, often less than the diameter of the engine shaft. The part of the rod K which encloses E is called the *eccentric strap*, and is made in two parts, and may be separate from K, the *eccentric rod*, which is usually bolted to one of these parts; the cylindrical pair is also so shaped as to allow no axial motion of K on E.

If the crank pin is still further expanded until it includes the crosshead pin, the arrangement shown in Fig. 345 is obtained. In this case, the element of the cylindric pair which belongs to the crank AB has

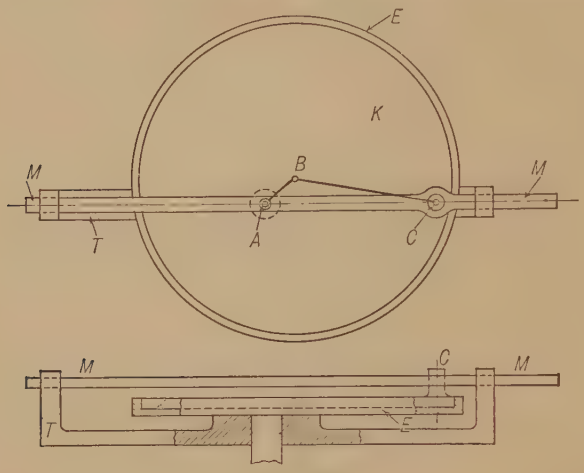

FIG. 345

been inverted, and thus made open. The rod BC becomes an eccentric disk which swings about the axis of bearing in the piece M, and is always in contact with the hollow disk E, carried by the shaft turning in T.

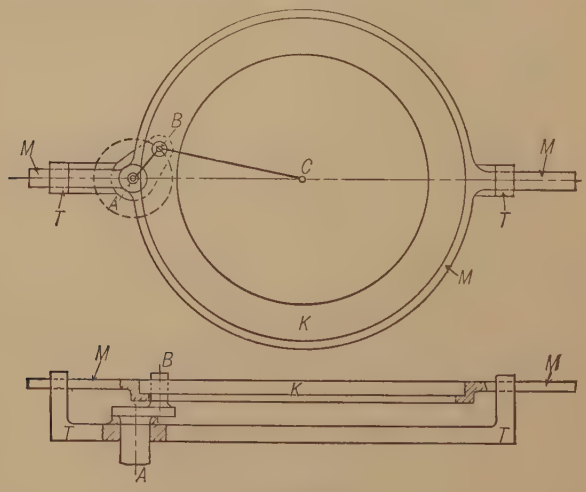

FIG. 346

If, instead of enlarging the crank pin to include the crosshead pin, the latter is enlarged to include the former, the arrangement shown in Fig. 346 is obtained. The rod BC is again an eccentric disk or annular

ring; but it now oscillates in a ring forming part of the piece M, while the crank pin drives it by internal contact. In order to make the relations of these expansions more clear, fine light lines have been drawn in each case, showing the elementary links. The above exhausts all the practicable combinations of the three cylindric pairs.

In Fig. 346 the link K may be replaced by an annular ring containing the crank pin and oscillating in a corresponding annular groove in the piece M. So long as the center of this ring remains the same as that of K, the mechanism remains unchanged, and as the motion of the ring is merely oscillatory, only a sector of it need be used and enough of the annular groove to admit of sufficient motion of the sector in its swing. Fig. 347 represents the arrangement altered in this way, the different

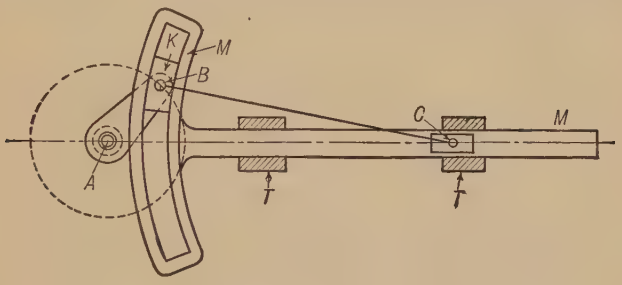

FIG. 347

parts being lettered the same as in Fig. 346, BC is still the connecting rod replaced by K and its motion as a link in the chain remains the same as before, and is completely restrained; the shape of the sector always fixes the length of the connecting rod. This mechanism is made use of in the Stevenson and Gooch reversing gears for locomotives, and in other places; the chains are not there simple, but compound. It will be noticed that if the radius of the slot is made infinite the result will be as in Fig. 325.

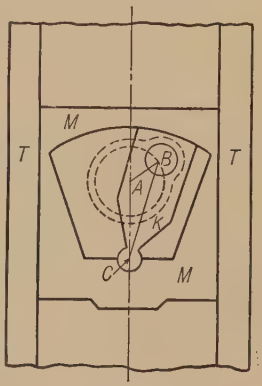

FIG. 348

The mechanism shown in Fig. 348, which sometimes occurs in slotting and metal-punching machines, is another illustration of pin expansion. The whole forms a sliding-block linkage; the link K is formed essentially as in Fig. 347, but here the profiles against which it works are concave on both sides of the crank pin, the upper profile being of large, and the lower of very small, radius, but both forming part of the block M. The work is done when the block M is moving

downwards, and the small radius profile being then in use, the friction is reduced. In this case the block M is so enclosed by the guides T that the profiles representing the crosshead pin lie entirely within the sliding pair, an illustration of how the method of expansion can be applied to the fourth or sliding pair.

The illustrations in Figs. 335, 340 and 342 furnish further examples of the expansion or modification of various parts of the linkage in order to make the mechanical application possible.

A change in the shape of an elementary link frequently permits motions to take place which are not otherwise possible. In Fig. 349,

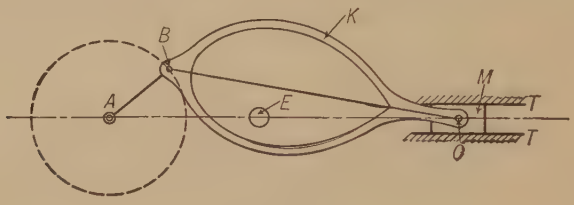

FIG. 349

for example, a complete rotation of BA to cause a reciprocation of M would be possible with the open rod K moving around the fixed shaft E, but not with the elementary link BC, shown by a light line.

243. The Isosceles Linkage. If the link BC (Fig. 321) is made equal in length to AB the result is a series of mechanisms analagous to those obtained from Fig. 321 by fixing successively the four links. The mechanisms obtained, however, have special properties due to the equality of AB and BC. Moreover, it will be seen that the four cases obtained by fixing the four links are reduced to two since the same result, kinematically, is obtained by fixing the block M as by fixing the piece T and the axis A; and by fixing BC as by fixing AB.

The Isosceles Sliding-Block Linkage. If the piece T is fixed as in Fig. 350 the mechanism corresponds to that of Fig. 322. Here (Fig. 350), if AB is the driver and C starts from the position C_1 it will be found when the crank AB is at an angle of 90° with AC_1 (the path of C) that C is directly over A and any further rotation of AB will cause only a similar rotation of CB. In order to cause C to continue in its path from this position it will be necessary to pair points on the centrode of BC for this position (when T is fixed) with the corresponding points on the centrode of T (when BC is fixed) as was done in the case of the anti-parallel crank linkage in Figs. 316 and 318.

The centrode of BC is the circle drawn about A as a center with radius $2\,AB$. This can be seen as follows:

In any position of the linkage, as that occupied in Fig. 350, produce AB to meet the perpendicular to AC_1, through C, at O, thus finding the instantaneous axis for that position. From B draw Bk perpendicular to AC_1; then, since ABC is an isosceles triangle, $Ak = kC = \frac{AC}{2}$. Hence, from the similarity of the triangles AOC and ABk, $AB = \frac{AO}{2}$. This holds for every position of the linkage. Therefore the locus of O, the instantaneous axis of BC, is the circle with radius 2 AB.

A similar method of reasoning can be followed to show that the centrode of T, with BC fixed, is a circle about B with radius BA.

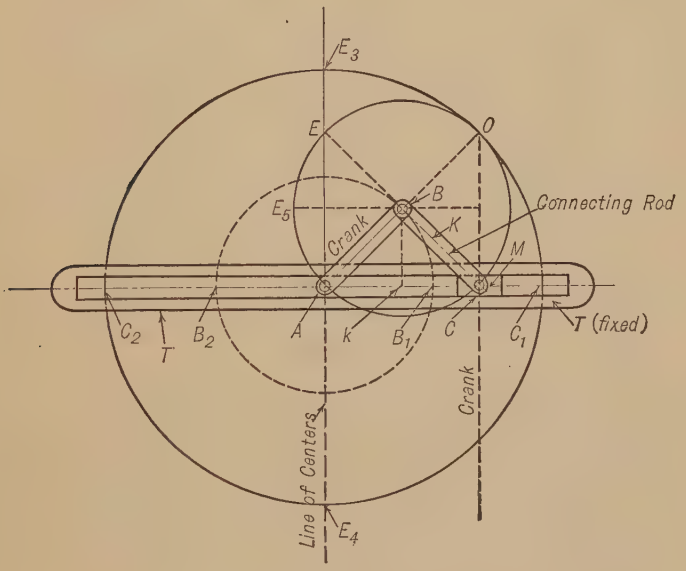

FIG. 350

From the properties of centrodes previousiy brought out, if the link BC is made fast to a disk of radius AB ($= BC$) with the point B at its center and C on its circumference, and this disk is rolled inside a fixed hollow cylinder of twice its own diameter, BC will have the same motion that it would if it were the connecting rod of the actual four-bar linkage ABC, and C will travel on a diameter of the larger circle.

It is evident that since BC is a radius of the centrode of T (that is, of the disk just referred to) and C has a motion along the diameter C_1AC_2, if BC is prolonged to E, making BE equal to BC, E will travel the diameter E_3E_4, being at A when C is at C_1, at E_3 when AB and BC

are perpendicular to C_2AC_1 above C_1AC_2, at A again when C is at C_2, and at E_4 when AB is perpendicularly under C_1AC_2.

If now, when the actual linkage is used, with the connecting rod prolonged to E, a pin is centered at E and corresponding fixed eyes at E_3 and E_4 as in Fig. 351, a means is provided for causing C to continue in its path when AB is in the 90° positions.

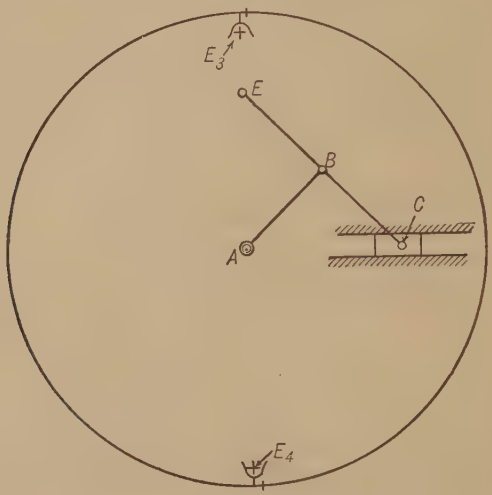

FIG. 351

It should be noticed that the paths of the points C and E, Fig. 350, as shown above, when considered as points of the circumference of the smaller circle (that is, on the surface of the centrode of T) are hypocycloids with the circle AO as the directing circle and circle BO as the generating circle. From this it is evident that the prolongation BE need not be in the same line as BC but may be at any angle as at BE_5, provided the eye is properly located.

If the crank AB turns at uniform angular speed C has harmonic motion over the path C_1AC_2 for C is always found at the foot of the perpendicular OC and O is always on the line AB produced distant $2\,AB$ from O. This agrees with the description given for harmonic motion in Chapter I.

In Fig. 352, lettered to correspond to Fig. 350, the actual crank AB is omitted and a block is placed at the end of the rod BE to guide E in a slot whose center line is a straight line passing through A. The nature of the linkage remains the same as in Fig. 350. The imaginary line joining B, the middle point of EC, to A, the point of intersection of the center lines of the slots is still the theoretical crank and, if motion is

imparted to C, B will move in a circular path about A. The whole may be thought of as two four-bar linkages $ABCD$ and $ABED_1$, with the crank AB common to the two linkages.

The Elliptic Trammel, which is so commonly used for drawing ellipses, is an application of the principle of the isosceles sliding-block linkage. Referring to the actual linkage as in Fig. 353, and its equivalent as in Fig. 354 (with CBE a straight line), it has been shown that E (Fig. 353) moves in a straight line through A and that B (Fig. 354) moves in a

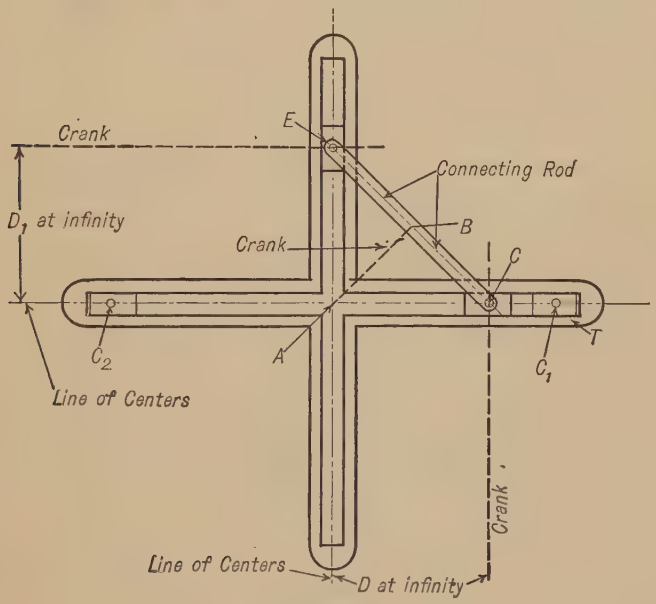

FIG. 352

circle about A. If any other point, as P, on the rod CE or CE prolonged, is chosen, P can be shown to move in a path which is an ellipse with axes lying along the paths of C and E and with semi-axes equal in length to PE and PC. If PE is less than PC the minor axis lies along the path of C. If PC is less than PE the minor axis lies along the path of E, as in the figure.

In the elliptic trammel the mechanism is usually applied in the form corresponding to Fig. 354 and the ellipse is usually traced by an adjustable point outside of E or C as in the figure; E and C are made so that their distance apart is adjustable and they are set one-half the difference of the major and minor axes apart.

An ellipse can be readily drawn by taking a card one corner of which shall represent the tracing point P. Points corresponding to the de-

sired positions of E and C are then marked on the edge of the card, and by placing these points in successive positions on lines at right angles with each other, corresponding to the slots in which the blocks in Fig. 354 move, and marking the successive positions of P, will give a series of points on the required ellipse.

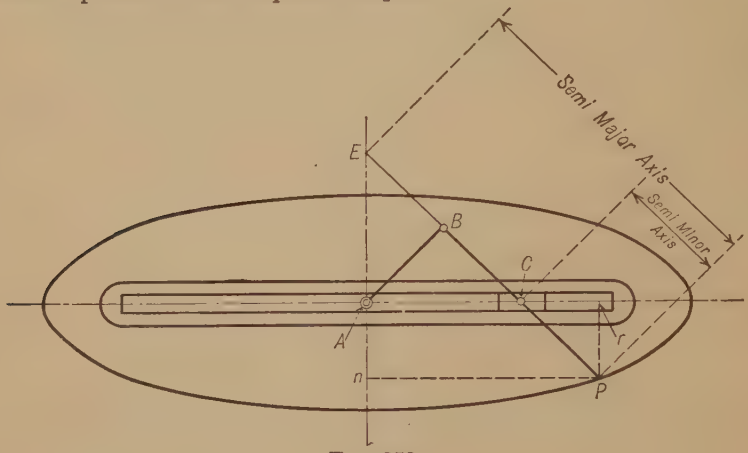

FIG. 353

To prove that the point P moves on an ellipse, let $Pn = x$; $Pr = y$; PE (semi-major axis) $= a$; PC (semi-minor axis) $= b$.

The equation of an ellipse referred to the center as the origin is

$$\frac{x^2}{a^2} + \frac{y^2}{b^2} = 1.$$

In Figs. 353 and 354

$$\frac{x}{a} = \frac{Pn}{PE} \quad \text{and} \quad \frac{y}{b} = \frac{Pr}{PC}$$

and, since the triangles nPE and rCP are similar,

$$\frac{Pr}{PC} = \frac{nE}{PE}.$$

Therefore

$$\frac{Pn}{PE} + \frac{Pr}{PC} = \frac{Pn}{PE} + \frac{nE}{PE}$$

and, in this case,

$$\frac{\overline{Pn}^2}{\overline{PE}^2} + \frac{\overline{Pr}^2}{\overline{PC}^2} = \frac{\overline{Pn}^2}{\overline{PE}^2} + \frac{\overline{nE}^2}{\overline{PE}^2} = \frac{\overline{Pn}^2 + \overline{nE}^2}{\overline{PE}^2} = 1.$$

Therefore

$$\frac{x^2}{a^2} + \frac{y^2}{b^2} = 1,$$

showing that the locus of P is an ellipse.

By fixing the link BC, Fig. 350, or the equivalent, fixing the centers C and E (allowing the blocks to turn), Fig. 352 or Fig. 354, the mechanism corresponding to the swinging-block linkage, Fig. 332, is obtained.

Two examples will be considered in which this linkage is expanded in the manner suggested in Figs. 352 and 354.

The Elliptic Chuck depends upon the principle proved for the elliptic trammel and upon the principle, previously referred to, that the *relative* motions of the parts of a linkage are independent of the fixedness of the links.

Now in drawing an ellipse with a trammel, the paper is fixed, and the pencil is moved over it; but in turning an ellipse in a lathe, the tool, which has the same position as the pencil, is fixed, and the piece to be turned should have such a motion as would compel the tool to cut

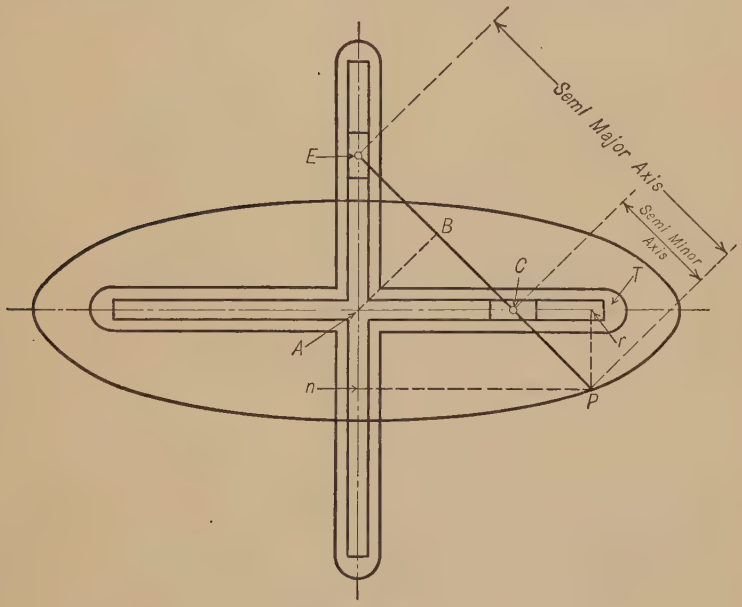

FIG. 354

ellipses. This is accomplished in the elliptic chuck, in which the spindle of the lathe, with a block on it, corresponds to the axis E of Fig. 354. In another fixed bearing whose axis corresponds to C is another shaft having a block on it. The point of the cutting tool is in a fixed position corresponding to P.

The piece carrying the work corresponds to T and has two slots at right angles, sliding over the blocks on the spindle and the axis C. The turning of the spindle causes the point of intersection of the center lines of these slots to move in a circle about the axis of the spindle and the whole piece to have such a motion that the point of the tool cuts an ellipse from the material attached to it.

The Oldhams Coupling shown in Fig. 355 is an interesting example of this form of linkage. The axis E of the upper shaft corresponds to E in Fig. 354 and the slotted disk on this shaft corresponds to the block at E; similarly, with the shaft at C. The intermediate disk T with two projections at right angles across its diameters replaces the cross T.

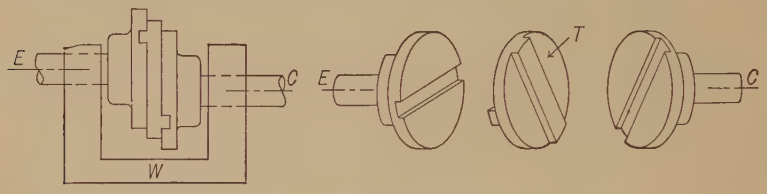

Fig. 355

The object of the device is to connect two parallel shafts placed a short distance apart so as to communicate uniform rotation from one to the other.

If the link AB, Fig. 350, is made the stationary link the result is the same, kinematically, as the linkage discussed in the last two illustra-

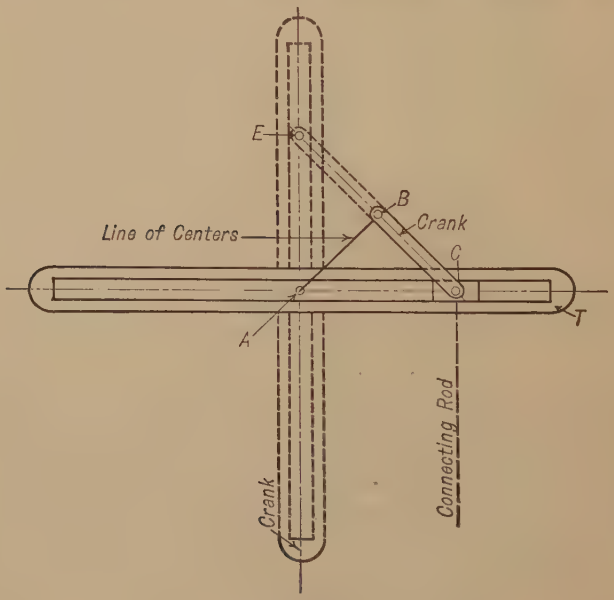

Fig. 356

tions. The details of application are somewhat different. Fig. 356 shows the mechanism.

If T is on a shaft centered at A the crank BC, through the arm T, will cause the shaft at A to turn at an angular speed equal to one-half its own. There may be two arms BC and BE with corresponding slots, the result being the equivalent of a two-toothed wheel driving, internally, one of four teeth. If there were three arms and three slots the equivalent gears would have three and six teeth.

244. Other Forms of Linkwork with Two Sliding Pairs. Fig. 357 shows a combination of an eccentric circular disk A, and a sliding piece C, moving through fixed guides, one of which is shown at D. A uniform rotation of A about the axis a will give harmonic motion to C. This can be shown by noticing that the distance which C has moved from its highest position is

$$cd = ef = ab\,(1 - \cos\theta),$$

which is the equation for simple harmonic motion where $2\,ab$ is the stroke of the slide.

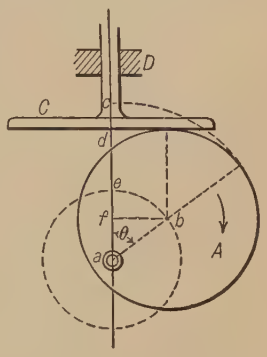

Fig. 357

This mechanism can also be found by an expansion of the crank pin B, Fig. 325, until it includes the shaft A, the slot being correspondingly enlarged, and then after turning the figure through 90°, omitting the lower part of the cross, allowing the pairing to be by force-closure.

The Swash-Plate. The apparatus shown in Fig. 358, known as a swash-plate, consists of an elliptical plate A set obliquely upon the shaft S, which by its rotation causes a sliding bar C to move up and down, in a line parallel to the axis of the shaft, in the guides D, the friction between the end of the bar and the plate being lessened by a small roller O. When a roller is used, the motion of the bar C is approximately harmonic — the smaller the roller the closer the approximation. If a point is used in place of the roller, the motion is harmonic, which can be shown as follows:

Fig. 358

Since the bar C remains always parallel to the axis of the shaft, the path of the point O, projected upon an imaginary plane through the lowest position of O and perpendicular to the shaft S, will be a circle, and the actual path of O on the plate A will be an ellipse.

In Fig. 359 let *eba* represent the angular inclination of the plate to the axis of the shaft, *ab* the axis of the shaft, *eof* the actual path of the point *o* on the plate, and the dotted circle *erd* the projection of this

path upon a plane through e (the lowest position of o) perpendicular to the axis ab.

Draw om perpendicular to ef, or perpendicular to the plane erd, and rn perpendicular to ed, the diameter of the circle erd. Join mn, and suppose the plate to rotate through an angle $ear = \theta$, and thus to carry the point o through a vertical distance equal to or.

Then

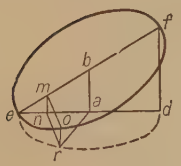

Fig. 359

$$or = mn = ab \times \frac{en}{ea} \left(\text{as } \frac{mn}{ab} = \frac{en}{ea} \right)$$

$$= ab \left(\frac{ea - an}{ea} \right)$$

$$= ab \left(1 - \frac{an}{ea} \right)$$

$$= ab\,(1 - \cos\theta),$$

or the same formula as was derived in the case of harmonic motion. In this case ab represents the length of the equivalent crank, and is equal in length to one-half of the stroke of the rod C.

245. The Conic Four-Bar Linkage. If the axes of the four cylindric pairs of the four-bar linkage are not parallel, but have a common point of intersection at a finite distance, the chain remains movable and also closed (Fig. 360). The lengths of the different links will now be measured on the surface of a sphere whose center is at the point of intersection of the axes. The axoids will no longer be cylinders, but cones, as all the instantaneous axes must pass through the common point of intersection of the pin axes.

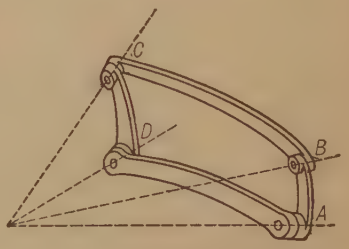

Fig. 360

The different forms of the cylindric linkage repeat themselves in the conical one, but with certain differences in their relations. The principal difference is in the relative lengths of the links, which would vary if they were measured upon spherical surfaces of different radii, the links being necessarily located at different distances from the center of the sphere in order that they may pass each other in their motions. The ratio, however, between the length of a link and its radius remains constant for all values of the radius, and these ratios are merely the values of the circular measures of the angles subtended by the links. In place of the link lengths, the relative magnitudes of these angles can be considered.

The alterations in the lengths of the links will now be represented by corresponding angular changes. The infinitely long link corresponds to an angle of 90°, as this gives motion on a great circle which corresponds to straight-line motion in the cylindric linkages.

Fig. 361 shows plan and elevation of a conic four-bar linkage $ABCD$, the link AB turning about A, and, for a complete turn, causing an oscillation of the link CD about D through the angle θ, shown in the elevation. In the figure each of the links BC and CD subtends 90°, while the link AB subtends about 30°. Varying the angles which the links subtend will, of course, vary the relative motions of AB and CD.

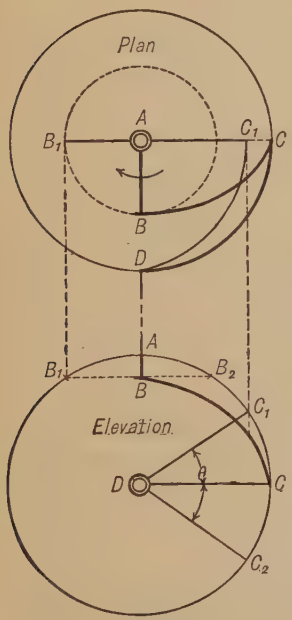

Fig. 361

246. Hooke's Joint. If in Fig. 361 each of the links AB, BC, and CD is made to subtend an angle of 90°, AB and CD will each make complete rotations. This mechanism, known as a **Hooke's joint,** is represented by Fig. 362, A and D are the two intersecting shafts, and the links AB and CD, fast to the shafts A and D respectively, subtend 90°, while the connecting link BC also subtends 90°.

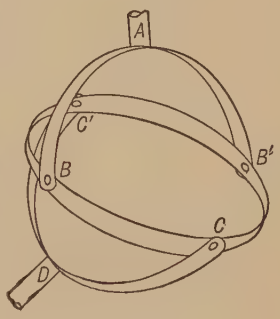

Fig. 362

In order to make the apparatus stronger and stiffer, two sets of links are used, and the link CB is continued around as shown, thus giving an annular ring joining the ends of the double links CDC' and BAB'. This ring is sometimes replaced by a sphere into which the pins C, B, C', and B' are fitted, or by a rectangular cross with arms of a circular section working in the circular holes at B, C, C', and B'. Or, the arms BAB_1 and CAC_1 may be paired with grooves cut in a sphere in planes passing through the center of the sphere and at right angles to each other. Such forms of Hooke's joint are much used.

Relative Motion of the Two Connected Shafts. — Given the angular motion of AB, to find the angle through which CD turns. Fig. 363 shows a plan and elevation of a Hooke's joint, so drawn that the axis A is perpendicular to the plane of elevation. If the link AB is turned

through an angle θ, it will be projected in the position AB_1. The path of the point C will be on a great circle in a plane perpendicular to the axis D, which will appear in the elevation as the ellipse BCE. The point C will then move to C_1, found by making the angle B_1AC_1 equal to 90°, for the link BC subtends 90°, and since the radius from B to the center of the sphere is always parallel to the plane of elevation, its projection and that of the radius from C will always be at right angles. The projected position of the linkage after turning A through the angle θ will be AB_1C_1D. To find the true angle through which the link CD and the shaft D have turned, swing the ellipse BCE with the axis D, until D is perpendicular to the plane of elevation, when the points C and C_1 will be found at C' and C_1', respectively, giving the angle $C_1'AC' = \phi$ as the true angle through which the axis D has turned. Or the arm DC_1 may be revolved until shaft D is perpendicular to the horizontal plane, giving $C_1BC_1' = \phi$, as shown in the plan.

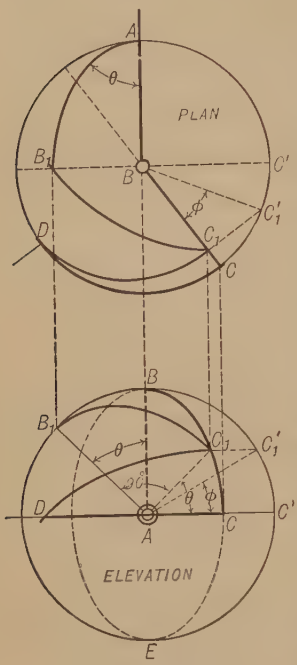

Fig. 363

It is evident from the above that two intersecting shafts connected by a single Hooke's joint cannot have uniform motions. If, however, two joints are used to connect two parallel or intersecting shafts, they may be so arranged that they will have uniform motions.

247. Double Hooke's Joint. *Two parallel or intersecting shafts may be connected by a double Hooke's joint and have uniform motions, provided that the intermediate shaft makes equal angles with the connected shafts, and that the links on the intermediate shaft are in the same plane.* Fig. 364 gives a plan and elevation of two shafts so connected, and the position after turning through an angle θ. It is evident that one joint just neutralizes the effect of the other.

The term **universal joint** is often used to designate the above-described mechanism.

248. Angular Speed Ratio in a Single Hooke's Joint. Fig. 365 reproduces the elevation given in Fig. 363, which shows the angles θ and ϕ through which A and D move respectively. The angle $EAC = \alpha$ will be the true angle between the planes in which the paths of the points B and C lie; to find the angle ϕ analytically in terms of θ and α, we have, from Fig. 365,

$$\tan\phi = \frac{C_1'G}{AG} = \frac{C_1F}{AG} \qquad \tan\theta = \frac{C_1F}{AF}.$$

$$\therefore \quad \frac{\tan\phi}{\tan\theta} = \frac{C_1F}{AG} \times \frac{AF}{C_1F} = \frac{AF}{AG} = \frac{AC}{AC'} = \frac{AC}{AE} = \cos\alpha;$$

$$\therefore \quad \tan\phi = \tan\theta\cos\alpha. \tag{92}$$

To obtain the velocity ratio, differentiate equation (92), remembering that $\cos\alpha$ is a constant; then

$$\frac{d\phi}{d\theta} = \frac{\sec^2\theta}{\sec^2\phi}\cos\alpha = \frac{1+\tan^2\theta}{1+\tan^2\phi}\cos\alpha. \tag{93}$$

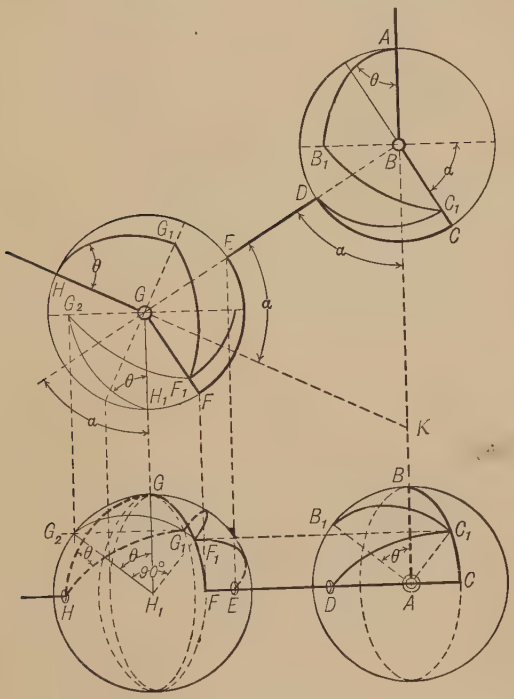

FIG. 364

If we eliminate ϕ and θ from equation (93), by use of equation (92) we shall obtain

$$\frac{d\phi}{d\theta} = \frac{\cos\alpha}{1-\sin^2\theta\sin^2\alpha} \tag{94}$$

$$= \frac{1-\cos^2\phi\sin^2\alpha}{\cos\alpha}. \tag{95}$$

Assume AB and CD the starting positions of the arms AB and CD respectively; then equations (94) and (95) will have minimum values when $\sin\theta = 0$ and $\cos\phi = 1$; this will happen when θ and ϕ are 0° and 180°, giving $\frac{d\phi}{d\theta} = \cos\alpha$ in both cases. Thus the minimum velocity ratio occurs when the driving arm is at AB and AB_2, the corresponding positions of the following arm being CD and C_2D. Maximum values occur when $\sin\theta = 1$ and $\cos\phi = 0$; then $\frac{d\phi}{d\theta} = \frac{1}{\cos\alpha}$, which will happen when θ and ϕ are 90° and 270°, the corresponding positions of the driving arm being AB_3 and AB_4.

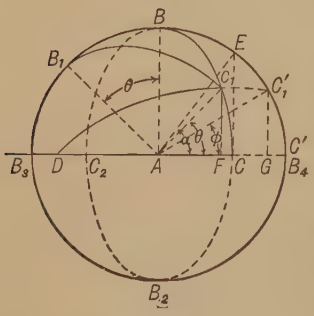

FIG. 365

Hence in one rotation of the driving shaft the velocity ratio varies twice between the limits $\frac{1}{\cos\alpha}$ and $\cos\alpha$; and between these points there are four positions where the value is unity.

If the angle α increases, the variation in the angular velocity ratio of the two connected shafts also increases; and when this variation becomes too great to be admissible in any case, other arrangements must be employed.

CHAPTER XII

STRAIGHT-LINE MECHANISMS — PARALLEL MOTIONS

249. A Straight-line Mechanism is a linkage designed to guide a reciprocating piece either exactly or approximately in a straight line, in order to avoid the friction arising from the use of straight guides. Some straight-line mechanisms are exact, that is, they guide the reciprocating piece in an exact straight line; others, which occur more frequently, are approximate, and are usually designed so that the middle and two extreme positions of the guided point shall be in one straight line, while at the same time care is taken that the intermediate positions deviate as little as possible from that line.

250. Peaucellier's Straight-line Mechanism. Fig. 366 shows a linkage, invented by M. Peaucellier, for describing an exact straight line within the limits of its motion.

It consists of eight links joined at their ends. Four of these links, A, B, C, and D, are equal to each other and form a cell; the two equal

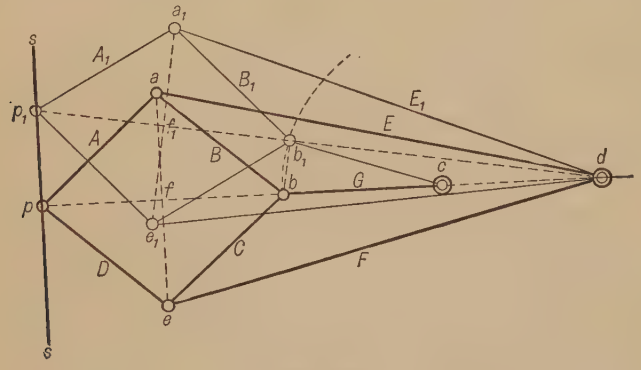

FIG. 366

links E and F connect the opposite points of the cell, a and e, with the fixed center of motion d; the link $G = \frac{1}{2}\,bd$ oscillates on the fixed center c, cd thus forming the fixed link equal in length to G.

If now the linkage be moved within the working limits of its construction (that is, until the links B and G, and C and G come into line on opposite sides of the center line of motion cd), the cell will open and

close; the points a and e will describe circular arcs about d, and b about c. Finally, the point p will describe a straight line ss perpendicular to the line of centers cd.

To prove this, move the linkage into some other position, as $p_1a_1b_1cd$. (It is to be noticed that since the links A and D, B and C, and E and F always form isosceles triangles with a common base, a straight line from p to d will always pass through b.) If the line traced by the point p is a straight line, the angle p_1pd will be 90°. The angle bb_1d is 90°, since $bc = cd = b_1c$; therefore the triangles p_1pd and bb_1d would be similar right triangles, and we should have

$$\frac{pd}{p_1d} = \frac{b_1d}{bd}.$$

To prove that ss is a straight line it is necessary to show that the above relation exists in the different positions of the linkage. In Fig. 366

$$E^2 = \overline{af}^2 + (bf + bd)^2;$$

$$B^2 = \overline{af}^2 + \overline{bf}^2;$$

$$\therefore \quad E^2 - B^2 = 2\,(bf)\,(bd) + \overline{bd}^2 = bd\,(bd + 2\,bf).$$

But, since the links A and B are equal, the triangle pab is isosceles and the base $pb = 2\,bf$.

$$\therefore \quad E^2 - B^2 = (bd)\,(pd). \tag{96}$$

By the same process, when the linkage is in any other position, as $p_1a_1b_1cd$, we should have

$$E_1^2 - B_1^2 = (b_1d)\,(p_1d). \tag{97}$$

Equating equations (44) and (45),

$$(bd)\,(pd) = (b_1d)\,(p_1d),$$

or

$$\frac{pd}{p_1d} = \frac{b_1d}{bd},$$

which proves that the path of the point p is on the straight line ss.

If the relation between the links cd and bc be taken different from that shown (Fig. 366), the points b and p, sometimes called the poles of the cell, will be found to describe circular arcs whose centers are on the line passing through c and d; in the case shown, one of these circular arcs has a radius infinity.

251. Scott Russell's Straight-line Mechanism. This mechanism, suggested by Mr. Scott Russell, is an application of the *isosceles sliding-block linkage.*

It is made up of the links ab and pc, Fig. 367. The link ab, centered at a, is joined to the middle point b of the link pc, and ab, bc and pb are taken equal to each other; and the point c is constrained to move

in the straight line ac by means of the sliding block. In this case the motion of the sliding block c is slight, as the entire motion of p is seldom taken as great as cp.

To show that the point p describes a straight line pp_1p_2 perpendicular to ac through a, a semicircle may be drawn through p and c with b as a center; it will also pass through a so that pac will be a right angle· therefore the point p is on ap, which is true for all positions of p.

The point a should be located in the middle of the path or stroke of p. The motion of c may then be found by the equation

$$cc_1 = cp - \sqrt{\overline{cp}^2 - \overline{ap}^2},$$

where ap is the half-stroke of p.

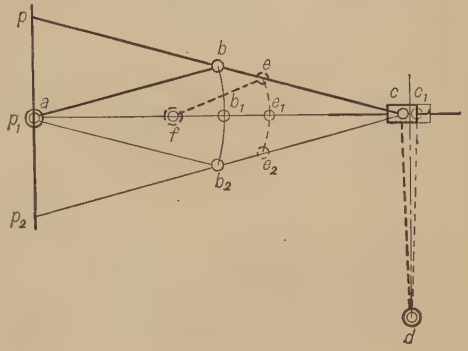

FIG. 367

Approximate straight-line motions somewhat resembling the preceding may be obtained by guiding the link cp entirely by oscillating links, instead of by a link and slide.

1° In the link cp (Fig. 367) choose a convenient point e whose mean position is e_1, and whose extreme positions are e and e_2. Through these three points pass a circular arc, ee_1e_2, the center of which f will be found on the line ac. Join e and f by a link ef, and the two links ab and ef will so guide pe that the mean and extreme positions of p will be found on the line pp_2, provided suitable pairs are supplied to cause passage by the central position.

2° The point c may be made to move very nearly in a straight line cc_1 by means of a link cd centered on a perpendicular erected at the middle point of the path of c. The longer this link the nearer the path of c will approach a straight line.

This straight-line motion has been applied in a form of small stationary engines, commonly known as *grasshopper engines*, where cbp (Fig. 367), extended beyond p, forms the beam of the engine, its right-hand end being supported by the link cd. The piston-rod is attached, by means of a crosshead, to the point p, which describes a straight line, and the connecting-rod is attached to a point in the line cp produced, both piston-rod and connecting-rod passing downward from cp. In this case it will be noticed that the pressure on the fulcrum c, of the beam, is equal to the difference of the pressures on the crosshead pin and crank-pin instead of the sum, as in the ordinary form of beam engine.

In this second form of motion it is not always convenient to place the point a in the line of motion pp_2, and it is often located on one side, as shown in Fig. 368

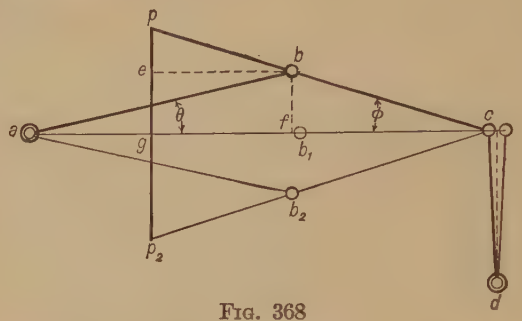

Fig. 368

The proportions of the different links which will cause the point p to be nearly on the straight line at the extreme positions and at the middle may be found as follows:

Let pg be one-half the stroke of the point p, and let the angle $bac = \theta$, and $bca = pbe = \phi$. In this extreme position we may write

$$\begin{aligned} ag &= af - fg = af - be \\ &= ab\cos\theta - pb\cos\phi \\ &= ab\left(1 - 2\sin^2\frac{\theta}{2}\right) - pb\left(1 - 2\sin^2\frac{\phi}{2}\right). \end{aligned}$$

But if the links are taken long enough, so that for a given stroke the angles θ and ϕ are small, then $\sin\theta = \theta$, nearly, and $\sin\phi = \phi$, nearly, and

$$\begin{aligned} ag &= ab\left(1 - \frac{\theta^2}{2}\right) - pb\left(1 - \frac{\phi^2}{2}\right) \\ &= ab - pb - ab\frac{\theta^2}{2} + pb\frac{\phi^2}{2}. \end{aligned} \tag{98}$$

If the linkage is now placed in its mid-position,

$$ag = ab - pb. \tag{99}$$

Equating Equations (98) and (99),

$$ab\frac{\theta^2}{2} = pb\frac{\phi^2}{2},$$

or

$$\frac{ab}{pb} = \frac{\phi^2}{\theta^2}. \tag{100}$$

But in the triangle abc

$$\frac{ab}{bc} = \frac{\sin\phi}{\sin\theta} = \frac{\phi}{\theta}, \text{ nearly;}$$

$$\therefore \quad \frac{ab}{pb} = \frac{\overline{ab}^2}{\overline{bc}^2}, \text{ or } (ab)\,(pb) = \overline{bc}^2. \tag{101}$$

Hence the links must be so proportioned that bc is a mean proportional between ab and pb, which also holds true when the path of p falls to the left of a instead of between a and c.

As an example of the case where the path of the guided point falls to the left of a we have the straight-line motion of the Thompson steam-engine indicator, Fig. 374.

252. Watt's Straight-line Mechanism. Fig. 369 shows a Watt straight-line mechanism. Here the two links ad and bc connected by the link ab oscillate on the fixed centers d and c, and any point, as p, in the connecting link ab will describe a complex curve. If the point p be properly chosen, a double-looped curve will be obtained, two parts of which are nearly straight lines. In designing such a motion it is customary to use only a portion ef of one of the approximate straight lines, and to so proportion the different links that the extreme and middle points e, f, and p shall be on a line perpendicular to the center lines of the levers ad and bc in their middle positions, when they should be taken parallel to each other.

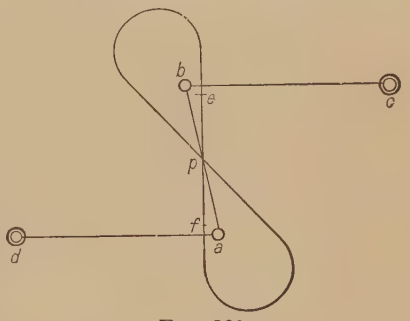

FIG. 369

The linkage is shown in its mid-position by $dabc$, Fig. 370, and in the upper extreme position by da_1b_1c, where pp_1 is to be one-half the stroke of p. Given the positions of the links ad and bc when in their mid-position, the axes c and d, the line of stroke ss, and the length of the stroke desired; to find the points a and b, giving the link ab, and to prove that the point p, where ab crosses ss, will be found on the line ss when it is moved up (or down) one-half the given stroke. Lay off on ss from the points g and h, where the links ad and bc cross the line ss, *one-quarter* of the stroke, giving the points k and l; connect these points with the axes d and c respectively; draw the lines aka_1 and blb_1 perpendicular to dk and cl respectively, making $aa_1 = 2\,ak$ and $bb_1 = 2\,bl$; then if the link centered at d were ad, it could swing to a_1d, and similarly bc could swing to b_1c. By construction $kg = \frac{1}{4}$ stroke, and $aa_1 = 2\,ak$; therefore $a_1e = \frac{1}{2}$ stroke. Similarly $b_1f = \frac{1}{2}$ stroke, which would make the figure ea_1b_1f a parallelogram, and a_1b_1 would equal ef. But ef is equal to ab, since $bh = hf$ and $ag = ge$. Therefore, if the linkage is $dbac$, it can occupy the position da_1b_1c; and since $ap = ep = a_1p_1$, and $pp_1 = ea_1 = \frac{1}{2}$ the stroke, the point d will be at p_1 and $\frac{1}{2}$ the stroke above p.

To calculate the lengths of the links, given dg, ch, and gh, and the length of stroke S. Since the chord aa_1 of the arc through which a would move is bisected at right angles by the line dk,

$$gk^2 = (ag)\,(dg) = \frac{S^2}{16}.$$

$$\therefore \quad ag = \frac{S^2}{16\,dg} \quad \text{and} \quad ad = dg + \frac{S^2}{16\,dg}.$$

Similarly,
$$bc = ch + \frac{S^2}{16\,ch};$$

$$ab = [\overline{gh}^2 + (ag + bh)^2]^{\frac{1}{2}}$$

$$= \left[\overline{gh}^2 + \left(\frac{S^2}{16\,dg} + \frac{S^2}{16\,ch}\right)^2\right]^{\frac{1}{2}}.$$

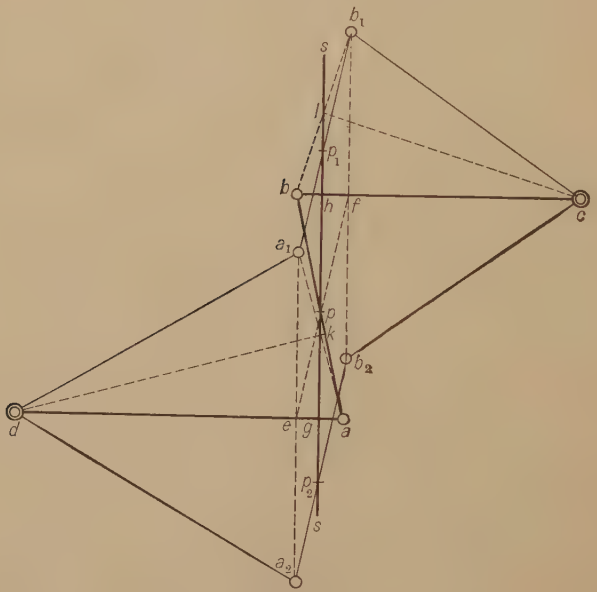

FIG. 370

To determine the position of the point p we have from the figure

$$ap : bp = ag : bh. \tag{102}$$

$$\therefore \quad ap : bp = \frac{S^2}{16\,dg} : \frac{S^2}{16\,ch} = ch : dg,$$

from which
$$ap : ab = ch : ch + dg,$$

or
$$bp : ab = dg : ch + dg,$$

from which the position of the guided point p can be calculated. If, as is very often the case, $ad = bc$, then

$$ad = bc = dg + \frac{S^2}{16\,dg},$$

and $$bp : ab = dg : 2\,dg,$$

or $$bp = \tfrac{1}{2}\,ab,$$

and the point p is thus at the middle of the link ab.

This mechanism may be arranged as shown in Fig. 371, where the centers c and d are on the same side of the line of motion. The graphical

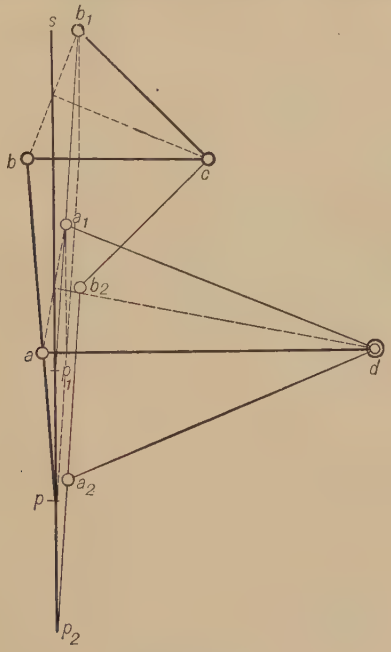

Fig. 371

solution is the same as in Fig. 370, with the result that p is found where ab extended crosses the line of stroke ss, and, as before, it can be shown that if p is moved up one-half the given stroke, it will be found on the line of stroke ss.

In Fig. 370, letting the angle $ada_1 = \theta$ and $bcb_1 = \phi$, we have, from Equation (102),

$$\frac{ap}{bp} = \frac{ag}{bh} = \frac{ae}{bf} = \frac{ad\,(1 - \cos\,\theta)}{bc\,(1 - \cos\,\phi)} = \frac{\overline{ad}^2 \sin^2 \frac{\theta}{2}}{\overline{bc}^2 \sin^2 \frac{\phi}{2}},$$

which may be written

$$\frac{ap}{bp} = \frac{bc}{ad} \times \frac{\overline{ad}^2 \sin^2 \frac{\theta}{2}}{\overline{bc}^2 \sin^2 \frac{\phi}{2}}.$$

But $ad \sin \theta = bc \sin \phi$; and since the angles θ or ϕ would rarely exceed 20°, we may assume that

$$ad \sin \frac{\theta}{2} = bc \sin \frac{\phi}{2}.$$

$$\therefore \quad \frac{ap}{bp} = \frac{bc}{ad}, \text{ nearly,} \tag{103}$$

or the segments of the link are inversely proportional to the lengths of the nearer levers, which is the rule usually employed when the extreme positions can vary a very little from the straight line. When the levers are equal this rule is exact.

253. The Pantograph. The pantograph is a four-bar linkage so arranged as to form a parallelogram *abcd*, Fig. 372. Fixing some point in the linkage, as *e*, certain other points, as *f*, *g*, and *h*, will move parallel and similar to each other over any path either straight or curved. *These points, as f, g, and h, must lie on the same straight line passing through*

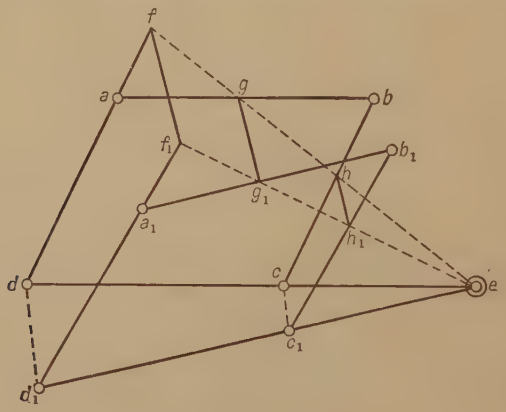

FIG. 372

the fixed point e, and their motions will then be proportional to their distances from the fixed point. To prove that this is so, move the point *f* to any other position, as f_1; the linkage will then be found to occupy the position $a_1b_1c_1d_1$. Connect f_1 with *e*; then h_1, where f_1e crosses the link b_1c_1, can be proved to be the same distance from c_1 that *h* is from *c*, and the line hh_1 will be parallel to ff_1.

In the original position, since fd is parallel to hc, we may write

$$\frac{fd}{hc} = \frac{de}{ce} = \frac{fe}{he}.$$

In the second position, since f_1d_1 is parallel to h_1c_1 and since f_1e is drawn a straight line, we have

$$\frac{f_1d_1}{h_1c_1} = \frac{d_1e}{c_1e} = \frac{f_1e}{h_1e}.$$

Now in these equations $\frac{de}{ce} = \frac{d_1e}{c_1e}$; therefore $\frac{fd}{hc} = \frac{f_1d_1}{h_1c_1}$; but $fd = f_1d_1$; which gives $hc = h_1c_1$, which proves that the point h has moved to h_1. Also $\frac{fe}{he} = \frac{f_1e}{h_1e}$, from which it follows that ff_1 is parallel to hh_1, and

$$\frac{ff_1}{hh_1} = \frac{fe}{he} = \frac{de}{ce},$$

or the motions are proportional to the distances of the points f and h from e.

To connect two points, as a and b, Fig. 373, by a pantograph, so that their motions shall be parallel and similar and in a given ratio, we have, first, that the fixed point c must be on the straight line ab continued,

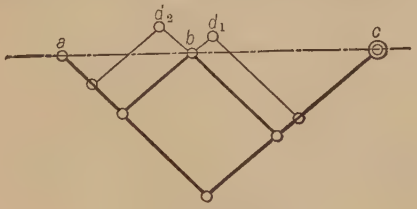

FIG. 373

and so located that ac is to bc as the desired ratio of the motion of a to b. After locating c, an infinite number of pantographs might be drawn. Care must be taken that the links are so proportioned as to allow the desired magnitude and direction of motion.

It is interesting to note that if b were the fixed point, a and c would move in opposite directions. It can be shown as before that their motions would be parallel and as ab is to bc.

The pantograph is often used to reduce or enlarge drawings, for it is evident that similar curves may be traced as well as straight lines. Also pantographs are used to increase or reduce motion in some definite proportion, as in the indicator rig on an engine where the motion of the crosshead is reduced proportionally to the desired length of the indicator diagram. When the points, as f and h (Fig. 372), are required to move in parallel straight lines it is not always necessary to employ a complete parallelogram, provided the mechanism is such that the

points f and h are properly guided. Such a case is shown in Fig. 374, which is a diagram of the mechanism for moving the pencil on a Thompson steam-engine indicator. The pencil at f, which traces the diagram on a paper carried by an oscillating drum, is guided by a Scott-Russell straight-line motion *abcd* so that it moves nearly in a straight line *ss* parallel to the axis of the drum, and to the center line of the cylinder *tt*. It must also be arranged that the motion of the pencil f always bears the same relation to the motion of the piston of the indicator on the line *tt*. To secure this draw a line from f to d and note the point e where it crosses the line *tt*. Then e will be a point on the piston-rod, which rod is guided in an exact straight line by the cylinder. If now the link *eh* is added so that its center line is parallel to *cd*, we should have,

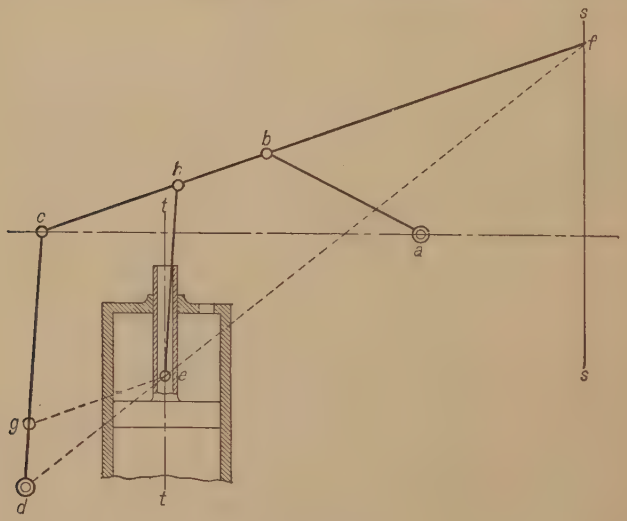

Fig. 374

assuming f to move on an exact straight line, the motion of f parallel to the motion of e and in a constant ratio as $cf : ch$ or as $df : de$. This can be seen by supposing the link eg to be added, which completes the pantograph *dgehcf*. If eg were added, the link *ab* could not be used, as the linkage *abcdf* does not give an exact straight-line motion to f. For constructive reasons the link eg is omitted; a ball joint is located at e which moves in an exact straight line, and the point f is guided by the Scott-Russell motion, the error in the motion being very slight indeed.

Slides are often substituted, in the manner just explained, for links of a pantograph, and exact reductions are thereby obtained. In Fig. 375 the points f and h are made to move on the parallel lines *mm* and *nn*

respectively. Suppose it is desired to have the point h move $\frac{1}{3}$ as much as f. Draw the line fhe and lay off the point e so that $eh : ef = 1 : 3$; draw a line, as ed, and locate a point d upon it which when connected to f with a link df will move nearly an equal distance to the right and left of the line ef and above and below the line mm for the known motion of f. Draw ch through h and parallel to df. The linkage $echdf$ will accomplish the result required. The dotted link ah may be added to complete the pantograph, and the slide h may then be removed or not as desired. The figure also shows how a point g may be made to move in the opposite direction to f in the same ratio as h but on the line n_1n_1, the equivalent pantograph being drawn dotted. The link ed is shown in its extreme position to the left by heavy lines and to the right by light lines.

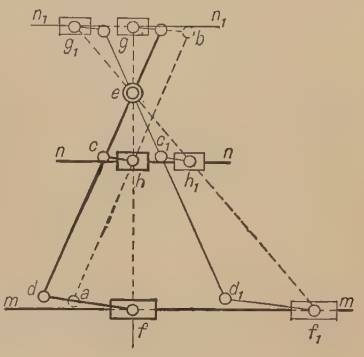

FIG. 375

254. Combination of Watt's Straight-line Mechanism with a Pantograph. Watt's straight-line mechanism has been much used in beam engines, and it is generally necessary to arrange so that more than one point can be guided, which is accomplished by a pantograph attachment.

In Fig. 376 a straight-line mechanism is arranged to guide three points p, p_1, and p_2 in parallel straight lines. The case chosen is that

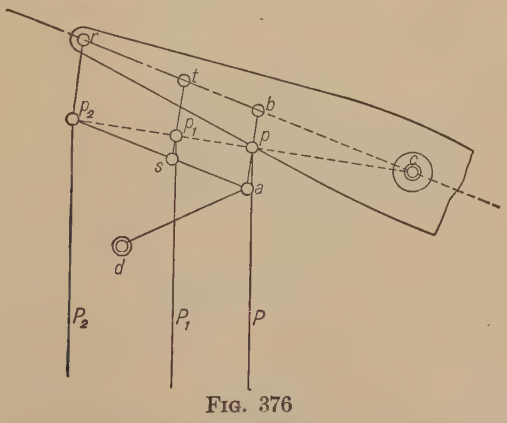

FIG. 376

of a compound condensing beam engine, where P_2 is the piston rod of the low-pressure cylinder, P_1 that of the high-pressure cylinder, and P

the pump rod, all of which should move in parallel straight lines, perpendicular to the center line of the beam in its middle position.

The fundamental linkage *dabc* is arranged to guide the point p as required; then adding the parallelograms *astb* and ap_2rb, placing the links *st* and p_2r so that they pass through the points p_1 and p_2 respectively, found by drawing the straight line *cp* and noting points p_1 and p_2 where it intersects lines P_1 and P_2, we obtain the complete linkage. The links are arranged in two sets, and the rods are carried between them; the links *da* are also placed outside of the links p_2a. When the point p falls within the beam a double pump-rod must be used. The linkage is shown in its extreme upper position to render its construction clearer.

The various links are usually designated as follows: *cr* the *main beam*, *ad* the *radius bar* or *bridle*, p_2r the *main link*, *ab* the *back link*, and p_2a the *parallel bar*, connecting the main and back links.

In order to proportion the linkage so that the point p_2 shall fall at the end of the link rp_2 we have, by similar triangles *cbp* and crp_2,

$$cb : bp = cr : rp_2 = cr : ab.$$

$$\therefore \quad cr = \frac{ab \times cb}{bp}.$$

The relative stroke S of the point p_2 and s of the point p are expressed by the equation

$$S : s = cp_2 : cp = cr : cb.$$

If we denote by M and N the lengths of the perpendiculars dropped from c to the lines of motion P_2 and P respectively, then

$$S : s = M : N$$

and

$$S = s\frac{M}{N}; \quad s = S\frac{N}{M}. \tag{104}$$

The problem will generally be, given the centers of the main beam c and bridle d, the stroke S of the point p_2, and the paths of the guided points p, p_1, and p_2, to find the remaining parts. The strokes of the guided points can be found from Equation (104) and then the method of § 252, Fig. 370, can be applied.

255. Robert's Approximate Straight-line Mechanism. This might also be called the W straight-line mechanism, and is shown in Fig. 377. It consists of a rigid triangular frame *abp* forming an isosceles triangle on *ab*, the points *a* and *b* being guided by links $ad = bc = bp$, oscillating on the centers *d* and *c* respectively, which are on the line of motion *dc*.

To lay out the motion, let *dc* be the straight line of the stroke along which the guided point p is to move approximately, and p be the mid-

dle point of that line. Draw two equal isosceles triangles, *dap* and *cbp*; join *ab*, which must equal *dp* = *pc*. Then *abp* is the rigid triangular frame, *p* the guided point, and *d* and *c* are the centers of the two links. The extreme positions when *p* is at *d* and *c* are shown at da_1a_2 and ca_2b_2, the point a_2 being common to both. The length of each side of the triangle, as *ap* = *da*, should not be less than 1.186 *dp*, since in this case the points ca_2a_1 and da_2b_2 lie in straight lines. It may be made as much greater as the space will permit, and the greater it is the more accurate will the motion be. The intermediate positions between *dp* and *cp* vary somewhat from the line *dc*.

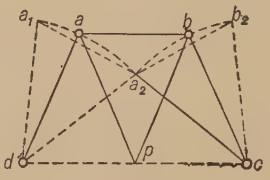

FIG. 377

256. Tchebicheff's Approximate Straight-line Mechanism. Fig. 378 shows another mechanism giving a close approximation to a straight-line motion invented by Prof. Tchebicheff.

The links are made in the following proportion: If *cd* = 4, then *ac* = *bd* = 5 and *ab* = 2. The guided point *p* is located midway between *a* and *b* on the link *ab* and is distant from *cd* an amount equal to $\sqrt{5^2 - 3^2} = 4$. When the point *p* moves to p_1, directly over *d*, $dp_1 = db_1 - b_1p_1 = 5 - 1 = 4$. Thus the middle and extreme positions of *p*, as shown, are in line, but the intermediate positions will be found to deviate slightly from the straight line. To render the range of motion shown on the figure possible the links *ac* and *bd* would need to be offset.

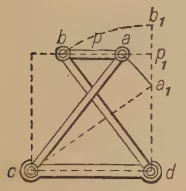

FIG. 378

257. Parallel Motion by Means of Four-bar Linkage. The parallel crank mechanism, § 234, Fig. 313, is very often used to produce parallel motions. The common parallel ruler, consisting of two parallel straight-edges connected by two equal and parallel links is a familiar example of such application. A double parallel crank mechanism is applied in the Universal Drafting-machine, extensively used in place of T square and triangles. Its essential features are shown in Fig. 379. The clamp *C* is made fast to the upper left-hand edge of the drawing-board and supports the first linkage *abcd*. The ring *cedf* carries the second linkage *efhg*, guiding the head *P*. The two combined scales and straight-edges *A* and *B*, fixed at right angles to each other, are arranged to swivel on *P*, and by means of a graduated circle and clamp-nut may be set at any desired angle, the device thus serving as a protractor. The fine lines show how the linkages appear when the head is moved to P_1, and it is easily seen that the straight-edges will always be guided into parallel positions.

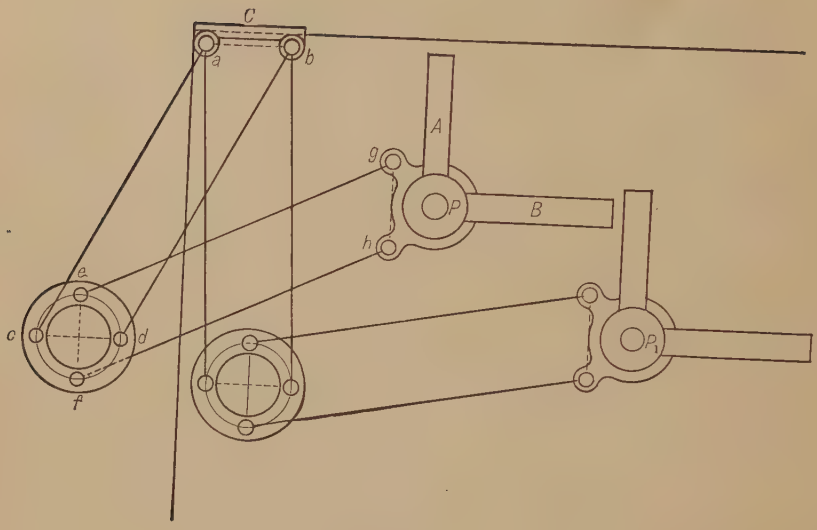

FIG. 379

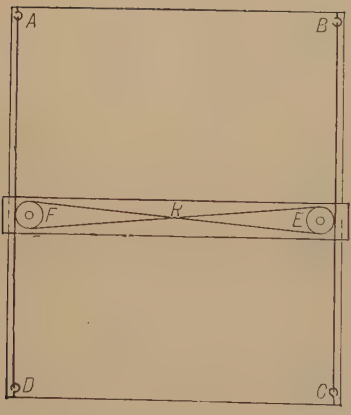

FIG. 380

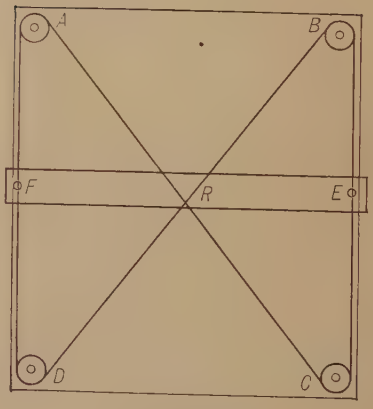

FIG. 381

258. Parallel Motion by Cords. Cords, wire ropes, or small steel wires are frequently used to compel the motion of long narrow carriages or sliders into parallel positions. In Fig. 380 the slider R has at either end the double-grooved wheels E and F. A cord attached to the hook A passes vertically downward under F, across over E, and downward to the hook C. A similarly arranged cord starts from B, passes around E and F, using the remaining grooves, and is made fast to hook D. On moving the slider downward it will be seen that for a motion of 1″ the wheel F will give out 1″ of the rope from A and take up 1″ of rope from D, which is only possible when E takes up 1″ from C and gives out 1″ to B. Thus the slider R is constrained to move into parallel positions. In practice turnbuckles or other means are provided to keep the cords taut.

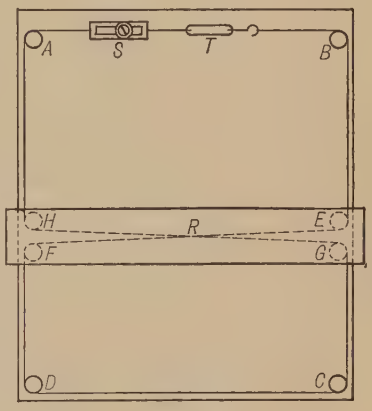

Fig. 382

Figs. 381 and 382 show two other arrangements which will accomplish the same purpose. In Fig. 381, sometimes applied to guide straight-edges on drawing-boards, the cords or wires cross on the back side of the board where the four guide-wheels are located and the straight-edge R is guided by special fastenings E and F, passing around the edges of and under the board. By making one of these fastenings movable the straight-edge may be adjusted. Fig. 382 shows a similar device that might be applied on a drawing-board. Here the wires are on the front of the board and are arranged to pass under the straight-edge in a suitable groove. The turnbuckle T serves to keep the wires taut, and the slotted link S allows adjustment.

The device shown in Fig. 380 is often known as a *squaring band* and is applied in spinning-mules and in some forms of travelling cranes.

CHAPTER XIII

MISCELLANEOUS MECHANISMS — AGGREGATE COMBINATIONS — PULLEY BLOCKS — INTERMITTENT MOTION

259. Aggregate Combinations is a term applied to assemblages of pieces in mechanism in which the motion of the follower is the resultant of the motions given to it by more than one driver. The number of independently-acting drivers which give motion to the follower is generally two, and cannot be greater than three, as each driver determines the motion of at least one point of the follower, and the motion of three points in a body fixes its motion.

By means of aggregate combinations we may produce very rapid or slow movements and complex paths, which could not well be obtained from a single driver.

The epicyclic gear trains discussed in Chapter VII in reality come under the heading of aggregate combinations.

260. Aggregate Motion by Linkwork. Figs. 383 and 384 represent the usual arrangement of such a combination. A rigid bar ab has two points, as a and b, each connected with one driver, while c may be connected with a follower. Let aa_1 represent the linear velocity of a, and bb_1 the linear velocity of b: to find the linear velocity of c. Consider the motions to take place separately; then if b were fixed, the linear velocity aa_1 given to a would cause c to have a velocity represented by cc_1. Considering a as fixed, the linear velocity bb_1 at b would give to c a velocity cc_2. The aggregate of these two would be the algebraic sum of cc_1 and cc_2. In Fig. 383 we have cc_1 acting to the left, while cc_2 acts to the right; therefore the resulting linear velocity of c will be $cc_3 = cc_1 - cc_2$ acting

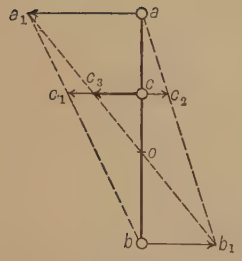

FIG. 383

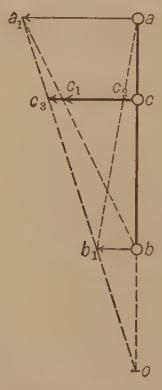

FIG. 384

to the left, since $cc_1 > cc_2$. In Fig. 384, where both cc_1 and cc_2 act to the left, the result is $cc_3 = cc_1 + cc_2$ acting to the left. It will be seen that the same results could have been obtained by finding the instantaneous axis o of ab in each case, when we should have linear velocity c : linear velocity $a = co : ao$.

In many cases the lines of motion are not exactly perpendicular to the link, nor parallel to each other, neither do the points a, b, and c necessarily lie in the same straight line, but often the conditions are approximately as assumed in Figs. 383 and 384, so that the error introduced by so considering them may be sufficiently small to be practically disregarded.

As examples of aggregate motion by linkwork we have the different forms of link motions as used in the valve gears of reversing steam engines. Here the ends of the links are driven by eccentrics, and the motion for the valve is taken from some intermediate point on the link whose distance from the ends may be varied at will, the nearer end having proportionally the greater influence on the resulting motion.

A wheel rolling upon a plane is a case of aggregate motion, the center of the wheel moving parallel to the plane, and the wheel itself rotating upon its center. The resultant of these two motions gives the aggregate result of rolling.

FIG. 385

261. Pulley-blocks for Hoisting. The simple forms of hoisting-tackle, as in Fig. 385, are examples of aggregate combinations. The sheaves C and D turn on a fixed axis, while A and B turn on a bearing from which the weight W is suspended. Fig. 386 is in effect the same as Fig. 385, but gives a clearer diagram for studying the linear velocity ratio. Assume that the bar ab with the sheaves A and B and the weight W has an upward velocity represented by v. The effect of this at the sheave A, since the point c at any instant is fixed, is equivalent to a wheel rolling on a plane, and there would be an upward linear velocity at $d = 2v$. At the sheave B there is the aggregate motion due

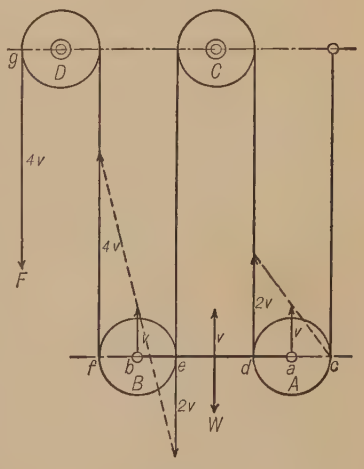

FIG. 386

to the *downward* linear velocity at $e = 2v$ and the upward linear velocity of the axis $b = v$, giving for the linear velocity of f, $4v$ upwards.

Therefore
$$\frac{\text{linear speed } F}{\text{linear speed } W} = \frac{4}{1} = \frac{W}{F}.$$

Many elevator-hoisting mechanisms are arranged in a similar manner, the force being applied at W, and the resulting force being given at F. This means a large force acting through a relatively small distance, producing a relatively small force acting through a much greater distance.

The *mechanical advantage* of a hoist is the ratio of the weight which can be lifted to the force which is exerted, friction being neglected.

The mechanical advantage of a given hoist can be determined by finding the velocity ratio as above and then, since the distances moved through in a given time (assuming constant velocity ratio) are directly as the velocities, the forces must be inversely as the velocities. Other methods of determining the mechanical advantage are illustrated by the following examples.*

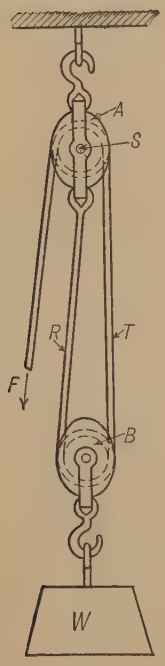

FIG. 387

Example 73. *Hoist with Two Single Sheave Blocks.* In Fig. 387 the upper block A, known as the standing block, is suspended from a fixed support. The rope is made fast to the casing of the upper block, passes around the sheave in the lower block and up around the sheave P which turns about the axis S in the upper block. It is required to find the force at F necessary to raise a weight W of 100 lbs. suspended from the lower block.

Solution. Assume that W is lifted 1 ft. by some external force with the rope at F not moving. Then 1 ft. of slack rope would result at R and another foot of slack at T, giving a total of 2 ft. of slack which must be drawn over to F in order to keep the rope tight. Therefore, the linear speed of F is to the linear speed of W as 2 is to 1. Hence, F is to W as 1 is to 2, or $F = \frac{1}{2} W = 50$ lbs.

Example 74. *Hoist with One Single Block and One Double Block.* The hoist shown in Fig. 388 has the part of the rope which is marked T made fast to the lower block; it then passes over a sheave in the upper block, comes down at R and passes under the sheave in the lower block, then up at P over a second sheave in the upper block and off at F.

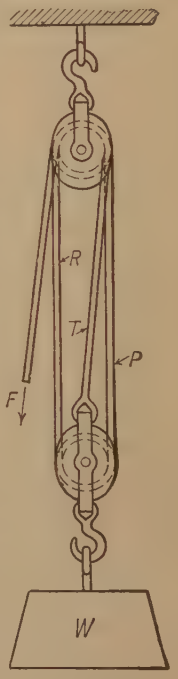

FIG. 388

* These solutions assume that the ropes are parallel.

It is required to find the mechanical advantage of this hoist; that is, the ratio of the weight W to the force at F.

Solution. Applying the same method used in Example 47, shows 1 ft. of slack in each of the three parts R, T, and P, or a total of 3 ft. which must be drawn off at F if W is lifted 1 ft. by an external force. Therefore,

$$\frac{W}{F} = \frac{3}{1}.$$

Example 75. "*Luff on Luff.*" Fig. 389 shows a combination of two sets of pulley blocks, the rope F of the first set being made fast to the moving block of the second set.

Solution. The mechanical advantage of each set is found as in the previous examples. Then the product of the two is the mechanical advantage of the combination. The first set in this case has a mechanical advantage of 3, and the second set of 4; therefore the combination has a mechanical advantage of 12. If the hook H were attached to a stationary support and the load applied to the hook K, the advantage of the system would be 16.

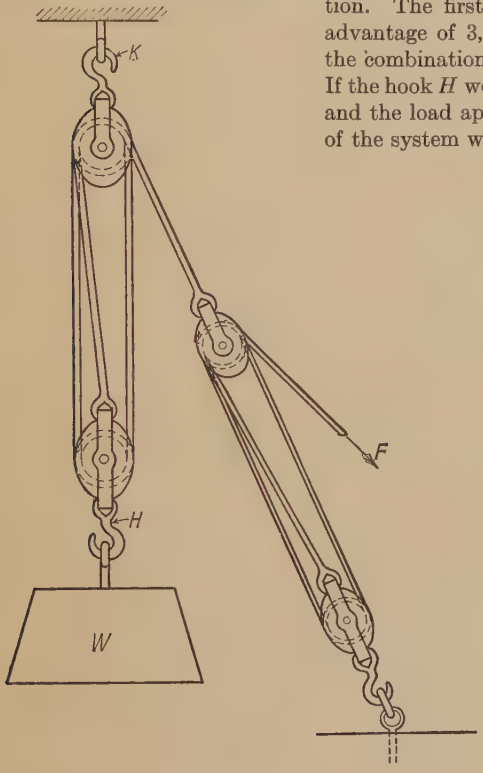

FIG. 389

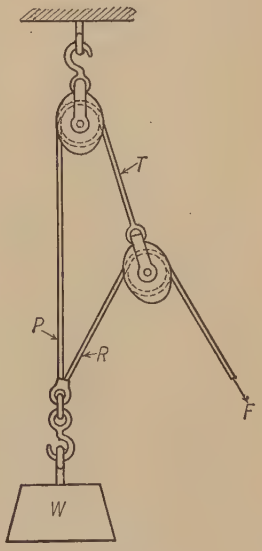

FIG. 390

Example 76. "*Spanish Burton.*" If the weight W (Fig. 390) is lifted 1 ft., a foot of slack is caused at both P and R. The foot at P is carried over to T which, in turn, causes a foot of slack in both R and F; this makes a total of 2 ft. of slack in R which must be drawn over to F in addition to the 1 ft. already given to F from T. Therefore, 3 ft. must be taken up at F for every foot that W is lifted. Then the mechanical advantage is 3.

262. Weston Differential Pulley Block. Fig. 391 shows a chain hoist known as the Weston Differential Pulley Block. The two upper sheaves A and B are fast to each other. The diameter of A is a little larger than the diameter of B and it is the ratio of these two diameters which governs the mechanical advantage.

The diameter of the lower sheave C is usually a mean between the diameters of the upper ones in order that the supporting chain may hang vertically. This feature is not of great importance, and the diameter of the lower sheave has no effect on the mechanical advantage.

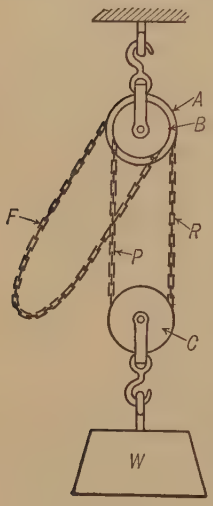

FIG. 391

The chain is endless, passing over A, down at R, under C, up at P, around B, and hanging loose. The lifting force is applied at F. The sheaves are so shaped that the links of the chain fit into spaces provided for them to prevent slipping.

The operation of the hoist may be seen from the following:

Let D_a represent the pitch diameter of the sheave A, D_b the pitch diameter of the sheave B. Assume that the chain is drawn down at F fast enough to cause A to make one complete turn in a unit of time; that is, F has a speed of πD_a linear units. This would give an upward speed to the chain at R of πD_a linear units. Then, if B were not turning the sheave C would roll up on P, its center rising at a speed equal to one-half the speed of the chain at R; that is, the center of the lower sheave, and therefore the weight W, would rise at a speed of $\frac{\pi D_a}{2}$ linear units. But at the same time that R is rolling C up on P the pulley B is turning at the same angular speed as A, and therefore paying out chain at P at the rate of πD_b linear units per unit of time. This causes C to roll down on R at a speed such that its center is lowered at a speed of $\frac{\pi D_b}{2}$ linear units. The resultant upward speed of the center of C is, therefore,

$$\frac{\pi D_a}{2} - \frac{\pi D_b}{2} = \frac{\pi (D_a - D_b)}{2}.$$

Since the speed of F is πD_a the ratio of the speed of F to that of W is

$$\frac{\pi D_a}{\frac{\pi (D_a - D_b)}{2}} = \frac{2 D_a}{D_a - D_b}.$$

The speed ratio may be found graphically as shown in Fig. 392.

From E lay off along the chain a distance V representing the velocity of E. Draw a line (shown dotted) from the end of this distance, to the center of the sheave. The length V_1 intercepted on the line of the chain through E_1 is the velocity of E_1. Draw V_1 downward at the left-hand side of the lower sheave and V upward at the right-hand side of the same sheave. Join the ends of these two lines as shown, getting V_4, the resultant velocity of M. The figure also shows, at V_2 and V_3, the effects of V and V_1 respectively, when assumed to act successively.

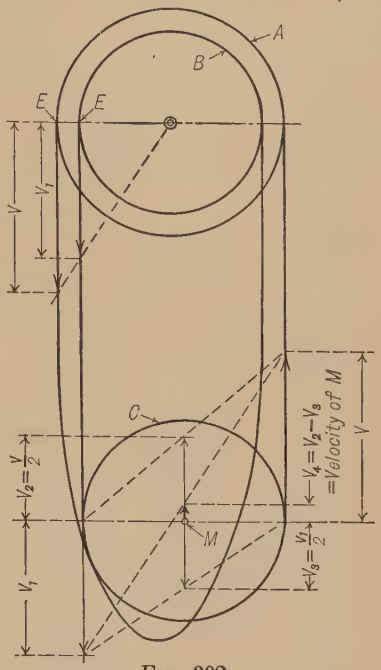

Fig. 392

263. Intermittent Motion from Reciprocating Motion. A reciprocating motion in one piece may cause an intermittent circular or rectilinear motion in another piece. It may be arranged that one-half of the reciprocating movement is suppressed and that the other half always produces motion in the same direction, giving the *ratchet-wheel;* or the reciprocating piece may act on opposite sides of a toothed wheel alternately, and allow the teeth to pass one at a time for each half reciprocation, giving the different forms of *escapements* as applied in timepieces.

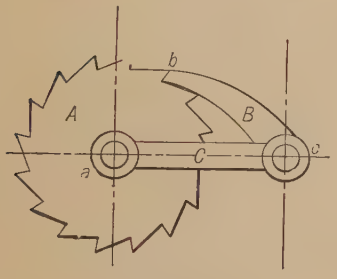

Fig. 393

264. Ratchet-wheel. A wheel, provided with suitably shaped pins or teeth, receiving an intermittent circular motion from some vibrating or reciprocating piece, is called a *ratchet-wheel.*

In Fig. 393, A represents the ratchet-wheel turning upon the shaft a; C is an oscillating lever carrying the *detent, click,* or *catch* B, which acts on the teeth of the wheel. The whole forms the three-bar linkage *acb.* When the arm C moves left-handed, the *click* B will push the wheel A before it through a space dependent upon the motion of C. When the arm moves back, the *click* will slide over the points

of the teeth, and will be ready to push the wheel on its forward motion as before; in any case, the *click* is held against the wheel either by its weight or the action of a spring. In order that the arm C may produce motion in the wheel A, its oscillation must be at least sufficient to cause the wheel to advance one tooth.

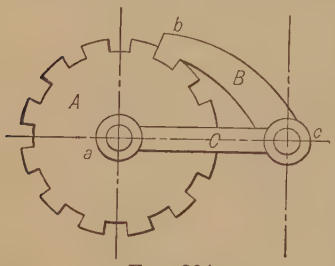

Fig. 394

It is often the case that the wheel A must be prevented from moving backward on the return of the click B. In such a case a fixed *pawl*, *click*, or *detent*, similar to B, turning on a fixed pin, is arranged to bear on the wheel, it being held in place by its weight or a spring. Fig. 393 might be taken to represent a retaining-pawl, in which case ac is a fixed link and the click B would prevent any right handed motion of the wheel A. Fig. 394 shows a retaining-pawl which would prevent rotation of the wheel A in either direction; such pawls are often used to retain pieces in definite adjusted positions.

If the diameter of the wheel A (Fig. 393) be increased indefinitely, it will become a rack which would then receive an intermittent translation on the vibration of the arm C; a retaining-pawl might be required in this case also to prevent a backward motion of the rack.

A click may be arranged to push, as in Fig. 393, or to pull, as in Fig. 400. In order that a click or pawl may retain its hold on the tooth of a ratchet-wheel, the common normal to the acting surfaces of the click and tooth, or pawl and tooth, must pass *inside* of the axis of a pushing click or pawl, as shown on the lowest click, Fig. 395, and *outside* the axis of the pulling click or pawl; the normal might pass through the axis, but the pawl would be more securely held if the normal is located according to the above rule, which also secures the easy falling of the pawl over the points of the teeth.

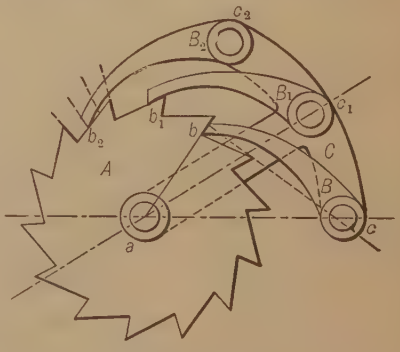

Fig. 395

It is sometimes necessary, or more convenient, to place the click-actuating lever on an axis different from that of the ratchet-wheel; in such a case care must be taken that in all positions of the click the common normal occupies the proper position; it will generally be suffi-

cient to consider only the extreme positions of the pawl in any case. Since when the lever vibrates on the axis of the wheel, the common normal always makes the same angle with it in all positions, thus securing a good bearing of the pawl on the tooth, it is best to use this construction when practicable.

The effective stroke of a click or pawl is the space through which the ratchet-wheel is driven for each forward stroke of the arm. The total stroke of the arm should exceed the effective stroke by an amount sufficient to allow the click to fall freely into place.

A common example of the application of the click and ratchet-wheel may be seen in several forms of ratchet-drills used to drill metals by hand. As examples of the retaining-pawl and wheel we have capstans and windlasses, where it is applied to prevent the recoil of the drum or barrel, for which purpose it is also applied in clocks.

It is sometimes desirable to hold a drum at shorter intervals than would correspond to the movement of one tooth of the ratchet-wheel; in such a case several equal pawls may be used. Fig. 395 shows a case where three pawls were used, all attached by pins c, c_1, c_2 to the fixed piece C, and so proportioned that they come into action alternately. Thus, when the wheel A has moved an amount corresponding to one-third of a tooth, the pawl B_1 will be in contact with the tooth b_1; after the next one-third movement, B_2 will be in contact with b_2; then after the remaining one-third movement, B will come into contact with the tooth under b; and so on. This arrangement enables us to obtain a slight motion and at the same time use comparatively large and strong teeth on the wheel in place of small weak ones. The piece C might also be used as a driving arm, and the wheel could then be moved through a space less than that of a tooth. The three pawls might be made of different lengths and placed side by side on one pin, as c_1, in which case a wide wheel would be necessary: the number of pawls required would be fixed by the conditions in each case.

265. Reversible Click or Pawl. The usual form of the teeth of a ratchet-wheel is that given in Fig. 395, which only admits of motion in one direction; but in *feed mechanisms*, such as those in use on shapers and planers, it is often necessary to make use of a click and ratchet-wheel that will drive in either direction. Such an arrangement is shown in Fig. 396, where the wheel A has radial teeth, and the click, which is made symmetrical, can occupy either of the positions B or B', thus giving to A a right- or a left-handed motion. In order that the click B may be held firmly against the ratchet-wheel A in all positions of the arm C, its pivot c, after passing through the arm, is provided with a small triangular piece (shown dotted); this piece turning with B has a flat-

ended presser, always urged upward by a spring (also shown dotted) bearing against the lower angle opposite B, thus urging the click toward the wheel; a similar action takes place when the click is in the dotted position B'. When the click is placed in line with the arm C, it is held in position by the side of the triangle parallel to the face of the click; thus this simple contrivance serves to hold the click so as to drive in either direction, and also to retain it in position when thrown out of gear.

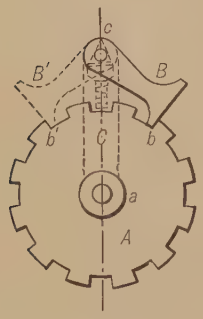

Fig. 396

Since for different classes of work a change in the "feed" is desired, the arrangement must be such that the motion of the ratchet-wheel A (Fig. 396), which produces the feed, can be adjusted. This is often done by changing the swing of the arm C, which is usually actuated by a rod attached at its free end. The other end of the rod is attached to a vibrating lever which has a definite angular movement at the proper time for the feed to occur, and is provided with a T slot in which the pivot for the rod can be adjusted by means of a thumb-screw and nut. By varying the distance of the nut from the center of motion of the lever, the swing of the arm C can be regulated; to reverse the feed, it occurring in the same position as before, the click must be reversed and the nut moved to the other side of the center of swing of the lever.

Figs. 397 and 398 show other methods of adjusting the motion of the ratchet-wheel. In Fig. 397, which shows a form of feed mechanism used by Sir J. Whitworth in his planing-machine, C is an arm carrying the click B, and swinging loosely on the shaft a fixed to the ratchet-

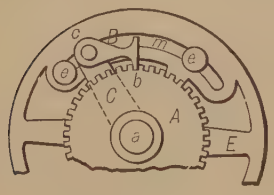

Fig. 397

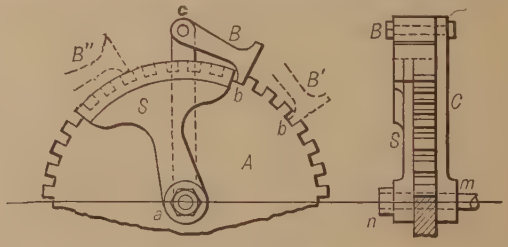

Fig. 398

wheel A. The wheel E, also turning loosely on the shaft a, and placed just behind the arm C, has a definite angular motion sufficient to produce the coarsest feed desired; its concentric slot m is provided with two adjustable pins ee, held in place by nuts at their back ends, and enclosing the lever C, but not of sufficient length to reach the click B. When the pins are placed at the ends of the slot, no motion will occur in

the arm C; but when e and e are placed as near as possible to each other, confining the arm C between them, all of the motion of E will be given to the arm C, thus producing the greatest feed; any other positions of the pins will give motions between the above limits, and the adjustment may be made to suit each case.

In Fig. 398, the stationary shaft a, made fast to the frame of the machine at m, carries the vibrating arm C, ratchet-wheel A, and adjustable shield S; the two former turn loosely on the shaft, while the latter is made fast to it by means of a nut n, the hole in S being made smaller than that in A, to provide a shoulder against which S is held by the nut. The arm C carries a pawl B of a thickness equal to that of the wheel plus that of the shield S; the extreme positions of this pawl are shown by dotted lines at B' and B''. The teeth of the wheel A may be made of such shape as to gear with another wheel operating the feed mechanism; or another wheel, gearing with the feed mechanism, might be made fast to the back of A, if more convenient: in the latter case, the arm C would be placed back of this second wheel.

If we suppose the lever in its extreme left position, the click will be at B'' resting upon the face of the shield S, which projects beyond the points of the teeth of A; and in the right-handed motion of the lever the click will be carried by the shield S until it reaches the position B, where it will leave the shield and come in contact with the tooth b, which it will push to b' in the remainder of the swing. In the backward swing of the lever the click will be drawn over the teeth of the wheel and face of the shield to the position B''. In the position of the shield shown in the figure a feed corresponding to three teeth of the wheel A is produced; by turning the shield to the left one, two, or three teeth, a feed of four, five, or six teeth might be obtained; while, by turning it to the right, the feed could be diminished, the shield S being usually made large enough to consume the entire swing of the arm C. This form of feed mechanism has often been used in slotting-machines, and in such cases, as well as in Figs. 397 and 398, the click is usually held to its work by gravity.

266. Double-acting Click. This device consists of two clicks making alternate strokes, so as to produce a nearly continuous motion of the ratchet-wheel which they drive, that motion being intermittent only at the instant of reversal of the movement of the clicks. In Fig. 399 the clicks act by pushing, and in Fig. 400 by pulling; the former arrangement is generally best adapted to cases where much strength is required, as in windlasses.

Each single stroke of the click-arms cdc' (Fig. 399) advances the ratchet-wheel through one-half of its pitch or some multiple of its half-pitch. To make this evident, suppose that the double click is to advance

the ratchet-wheel one tooth for each double stroke of the click-arms, the arms being shown in their mid-stroke position in the figure. Now when the click bc is beginning its forward stroke, the click $b'c'$ has just completed its forward stroke and is beginning its backward stroke; during the forward stroke of bc the ratchet-wheel will be advanced one-half a tooth; the click $b'c'$, being at the same time drawn back one-half a tooth, will fall into position ready to drive its tooth in the remain-

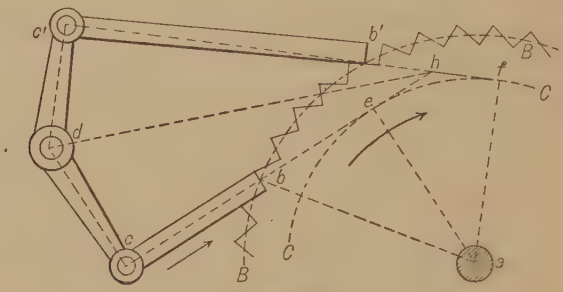

Fig. 399

ing single stroke of the click-arms, which are made equal in length. By the same reasoning it may be seen that the wheel can be moved ahead some whole number of teeth for each double stroke of the click-arms.

In Fig. 399 let the axis a and dimensions of the ratchet-wheel be given, also its pitch circle BB, which is located half-way between the tips and roots of the teeth. Draw any convenient radius ab, and from it lay off the angle bae equal to the mean obliquity of action of the clicks, that is, the angle that the lines of action of the clicks at mid-stroke are to make with the tangent to the pitch circle through the points of action. On ae let fall the perpendicular be, and with the radius ae describe the circle CC: this is the *base circle*, to which the lines of action of the clicks should be tangent. Lay off the angle eaf equal to *an odd number of times the half-pitch angle*, and through the points e and f, on the base circle, draw two tangents cutting each other in h. Draw hd bisecting the angle at h, and choose any convenient point in it, as d, for the center of the rocking shaft, to carry the click-arms. From d let fall the perpendiculars dc and dc' on the tangents hec and fhc' respectively; then c and c' will be the positions of the click-pins, and dc and dc' the center lines of the

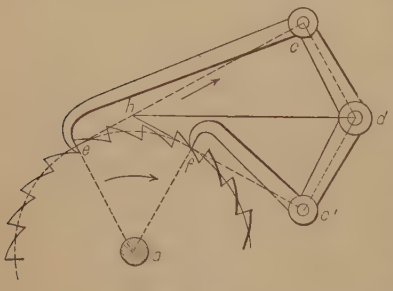

Fig. 400

click-arms at mid-stroke. Let b and b' be the points where ce and $c'f$ cut the pitch circle; then cb and $c'b'$ will be the lengths of the clicks. The *effective stroke* of each click will be equal to half the pitch as measured on the base circle CC (or some whole number of times this half-pitch), and the total stroke must be enough greater to make the clicks clear the teeth and drop well into place.

In Fig. 400 the clicks pull instead of push, the obliquity of action is zero, and the base circle and pitch circle become one, the points b, e, and b', f (Fig. 399) becoming e and f (Fig. 400). In all other respects the construction is the same as when the clicks act by pushing, and the different points are lettered the same as in Fig. 399.

Since springs are liable to lose their elasticity or become broken after being in use some time, it is often desirable to get along without applying them to keep clicks in position. Fig. 401 shows in elevation a mechanism where no springs are required to keep the clicks in place, it

FIG. 401

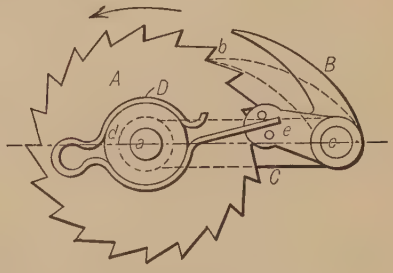

FIG. 402

being used in some forms of lawn-mowers to connect the wheels to the revolving cutter when the mower is pushed forward, and to allow a free backward motion of the mower while the cutter still revolves. The ratchet A is usually made on the inside of the wheels carrying the mower, and the piece C, turning on the same axis as A, carries the three equidistant pawls or clicks B, shaped to move in the cavities provided for them. In any position of C, at least one of the clicks will be held in contact with A by the action of gravity, and any motion of A in the direction of the arrow will be given to the piece C. Here the ratchet-wheel drives the click, ac being the actuated click-lever. The piece C is sometimes attached to a roller by means of the shaft a; then any left-handed motion of C will be given to A, while the right-handed motion will simply cause the clicks to slide over the teeth of A. The clicks B are usually held in place by a cap attached to C.

Fig. 402 shows a form of click which is always thrown into action

when a left-handed rotation is given to its arm C, while any motion of the wheel A left-handed will immediately throw the click out of action. The wheel A carries a projecting hub d, over which a spring D is fitted so as to move with slight friction. One end of this spring passes between two pins, e, placed upon an arm attached to the click B. When the arm C is turned left-handed, the wheel A and the spring D being stationary, the click B will be thrown toward the wheel by the action of the spring on the pin e. The motion of the wheel A will be equal to that of the arm C, minus the motion of C necessary to throw the click into gear. Similarly, when A turns left-handed, the click B is thrown out of gear. This mechanism is employed in some forms of spinning-mules to actuate the spindles when winding on the spun yarn.

267. Friction-catch. Various forms of catches depending upon friction are often used in place of clicks; these catches usually act upon the face of the wheel or in a suitably formed groove cut in the face. Friction-catches have the advantage of being noiseless and allowing any motion of the wheel, as they can take hold at any point; they have the disadvantage, however, of slipping when worn, and of getting out of order.

Fig. 403 shows a friction-catch B working in a V-shaped groove in the wheel A, as shown in section $A'B'$. Here B acts as a retaining

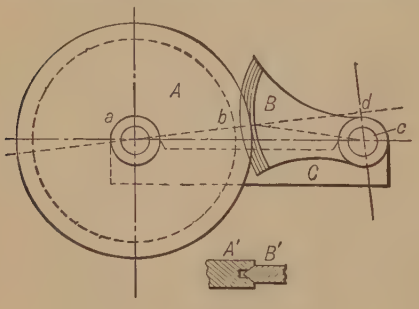

Fig. 403

Fig. 404

click, and prevents any right-handed motion of A; its face is circular in outline, the center being located at d, a little above the axis c. A similarly shaped catch might be used in place of an actuating click to cause motion of A.

Fig. 404 shows four catches like B (Fig. 403) applied to drive an annular ring A in the direction indicated by the arrow. When the piece c is turned right-handed, the catches B are thrown against the inside b of the annular ring by means of the four springs shown; on stopping the motion of c, the pieces B are pushed, by the action of b,

toward the springs which slightly press them against the ring and hold them in readiness to again grip when c moves right-handed. Thus an oscillation of the piece c might cause continuous rotation of the wheel A, provided a fly-wheel were applied to A to keep it going while c was being moved back. The annular ring A is fast to a disk carried by the shaft a; the piece c turning loosely on a has a collar to keep it in position lengthwise of the shaft.

The nipping-lever shown in Fig. 405 is another application of the friction-catch. A loose ring C surrounds the wheel A; a friction-catch B having a hollow face works in a pocket in the ring and is pivoted at c. On applying a force at the end of the catch B in the direction of the arrow, the hollow face of the catch will "nip" the wheel at b, and cause the ring to bear tightly against the left-hand part of the circumference of the wheel; the friction thus set up will cause the catch, ring, and wheel to move together as one piece. The greater the pull applied at the end of the catch the greater will be the friction, as the friction is proportional to the pressure; thus the amount of friction developed will depend upon the resistance to motion of A. Upon reversing the force at the end of the catch, the hollow face of the catch will be drawn away from the face of A, and the rounding top part of the catch, coming in contact with the top of the cavity in the ring, will cause the ring to slide back upon the disk. An upward motion of the click end will again cause the wheel A to move forward, and thus the action is the same as in a ratchet and wheel.

Fig. 406 shows, in section, a device which has been applied to actuate sewing-machines in place of the common crank. Two such mechan-

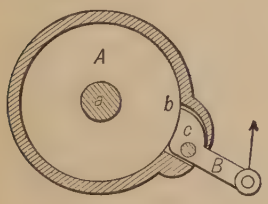

FIG. 405

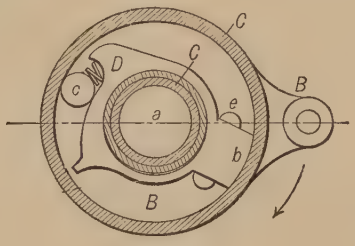

FIG. 406

isms were used, one to rotate the shaft of the machine on a downward tip of the treadle, while the other acted during the upward tip, the treadle-rods being attached to the projections of the pieces B. The mechanism shown in the figure acts upon the shaft during the downward motion of the projection B as shown by the arrow.

The piece C, containing an annular groove, is made fast to the shaft a, the sides of this groove being turned circular and concentric with the

shaft. The piece B, having a projecting hub fitting loosely on the inner surface of the groove in C, is placed over the open groove, and is held in place by a collar on the shaft. The hub on the piece B, and the piece C, are shown in section. The friction-catch D, working in the groove, is fitted over the hub of B, the hole in D being elongated in the direction ab so that D can move slightly upon the hub and between the two pins e fast in the piece B. A cylindrical roller c is placed in the wedge-shaped space between the outer side of the groove and the piece D, a spring always actuating this roller in a direction opposite to that of the arrow, or towards the narrower part of the space.

Now when the piece B is turned in the direction of the arrow by a downward stroke of the treadle-rod, it will move the piece D with it by means of the pins e; at the same time the roller c will move into the narrow part of the wedge-shaped space between C and D, and cause binding between the pieces D and C at b and at the surface of the roller. The friction at b thus set up will cause the motion of D to be given to C. On the upward motion of the projection B the roller will be moved to the large part of its space by the action of the piece C revolving with the shaft combined with that of the backward movement of D, thus releasing the pressure at b and allowing C to move freely onward. The other catch would be made just the reverse of this one, and would act on an upward movement of the treadle-rod.

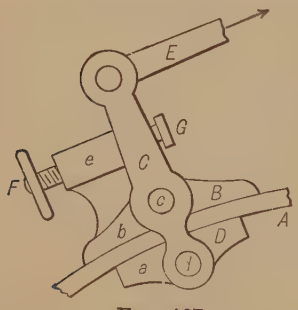

Fig. 407

Another form of friction catch, sometimes used in gang saws to secure the advance of the timber for each stroke of the saw, and called the *silent feed*, is shown in Fig. 407.

The saddle-block B, which rests upon the outer rim of the annular wheel A, carries the lever C turning upon the pin c. The block D, which fits the inner rim of the wheel, is carried by the lever C, and is securely held to its lower end by the pin d on which D can freely turn. When the pieces occupy the positions shown in the figure, a small space exists between the piece D and the inside of the rim A.

The upper end of the lever C has a reciprocating motion imparted to it by means of the rod E. The oscillation of the lever about the pin c is limited by the stops e and G carried by the saddle-block B. When the rod E is moved in the direction indicated by the arrow, the lever turning on c will cause the block D to approach B, and thus nip the rim at a and b; and any further motion of C will be given to the wheel A.

On moving E in the opposite direction the grip will first be loosened, and the lever striking against the stop e will cause the combination to slide freely back on the rim A. The amount of movement given to the wheel can be regulated by changing the stroke of the rod E by an arrangement similar to that described in connection with the reversible click, § 265. The stop G can be adjusted by means of the screw F so as to prevent the oscillation of the lever upon its center c, thus throwing the grip out of action. The saddle-block B then merely slides back and forth on the rim, the action being the same as that obtained by throwing the ordinary click out of gear.

268. Masked Wheels. It is sometimes required that certain strokes of the click-actuating lever shall remain inoperative upon the ratchet-wheel. Such arrangements are made use of in numbering-machines where it is desired to print the same number twice in succession; they are called *masked wheels.*

Fig. 408, taken from a model, illustrates the action of a masked wheel; the pin-wheel D represents the first ratchet-wheel, and is fast to the axis a; the second wheel A has its teeth arranged in pairs, every alternate tooth being cut deeper, and it turns loosely on the axis a. The click B is so made that one of its acting surfaces, i, bears against the pins e of the wheel D, while the other, g, is placed so as to clear the pins and yet bear upon the teeth of A, the wheel A being located so as to admit of this.

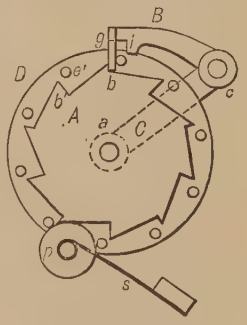

Fig. 408

If now we suppose the lever C to vibrate through an angle sufficient to move either wheel along one tooth, both having the same number, it will be noticed that when the projecting piece g is resting in a shallow tooth of the wheel A, the acting surface i will be retained too far from the axis to act upon the tooth e, and thus this vibration of the lever will have no effect upon the pin-wheel D; while when the piece g rests in a deep tooth, as b', the click will be allowed to drop so as to bring the surface i into action with the pin e'.

In the figure the click B has just pushed the tooth e' into its present position, the projection g having rested in the deep tooth b' of the wheel A; on moving back, g has slipped into the shallow tooth b, and thus the next stroke of the lever and click will remain inoperative on the wheel D, which advances but one tooth for every two complete oscillations of the lever C.

Both wheels should be provided with retaining-pawls, one of which, p, is shown. This form of pawl, consisting of a roller p turning about

a pivot carried by the spring s, attached to the frame carrying the mechanism, is often used in connection with pin-wheels, as by rolling between the teeth it always retains them in the same position relative to the axis of the roller; a triangular-pointed pawl which also passes between the pins is sometimes used in place of the roller.

The pins of the wheel D might be replaced by teeth so made that their points would be just inside of the bottoms of the shallow teeth of A; a wide pawl would then be used, and when it rested in a shallow tooth of A it would remain inoperative on D, while when it rested in a deep tooth it would come in contact with the adjacent tooth of D and push it along.

So long as the click B and the wheels have the proper relative motion it makes no difference which we consider as fixed, as the action will be the same whether we consider the axis of the wheels as fixed and the click to move, or the click to be fixed and the axis to have the proper relative motion in regard to it. The latter method is made use of in some forms of numbering-machines.

269. Counter Mechanism. Fig. 409 shows the mechanism of a "counter" used to record the number of double strokes made by a pump; the revolutions made by a steam engine, paddle, propeller, or other shaft, etc. Two views are given in the figure, which represents a counter capable of recording revolutions from 1 to 999; if it is desired to record higher numbers, it will only be necessary to add more wheels, such as A. A plate, having a long slot or series of openings opposite the figures 000, is placed over the wheels, thus only allowing the numbers to be visible as they come under the slot or openings.

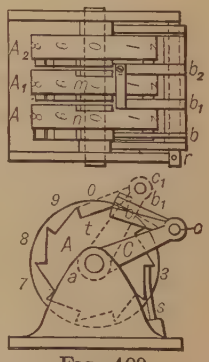

FIG. 409

The number wheels A, A_1, A_2 are arranged to turn loosely side by side upon the small shaft a, and are provided with a series of ten teeth cut into one side of their faces, while upon the other side a single notch is cut opposite the zero tooth on the first side, it having the same depth and contour. This single notch can be omitted on the last wheel A_2. The numbers 0, 1, 2, 3, 4, 5, 6, 7, 8, 9 are printed upon the faces of the wheels in proper relative positions to the teeth t.

Two arms C are arranged to vibrate upon the shaft a of the number wheels, and carry at their outer ends the pin c, on which a series of clicks, b, b_1, and b_2, are arranged, collars placed between them serving to keep them in position on the pin. The arms are made to vibrate through an angle sufficient to advance the wheels one tooth, i.e., one-

tenth of a turn; their position after advancing a tooth is shown by dotted lines in the side view. A common method of obtaining this vibration is to attach a rod at r, one end of the pin c, this rod to be so attached at its other end to the machine as to cause the required backward and forward vibrations of the lever C for each double stroke or revolution that the counter is to record.

The click b is narrow, and works upon the toothed edge of the first wheel A, advancing it one tooth for every double stroke of the arm c. The remaining clicks b_1 and b_2 are made broad, and work on the toothed edges of A_1 and A_2, as well as on the notched rims of A and A_1, respectively. When the notches n and m come under the clicks b_1 and b_2 the clicks will be allowed to fall and act on the toothed parts of A_1 and A_2; but in any other positions of the notches the clicks will remain inoperative upon the wheels, simply riding upon the smooth rims of A and A_1, which keep the clicks out of action. Each wheel is provided with a retaining-spring s to keep it in proper position.

Having placed the wheels in the position shown in the figure, the reading being 000, the action is as follows: The click b moves the wheel A along one tooth for each double stroke of the arm C, the clicks b_1 and b_2 remaining inoperative on A_1 and A_2; on the figure 9 reaching the slot, or the position now occupied by 0, the notch n will allow the click b_1 to fall into the tooth 1 of the wheel A_1, and the next forward stroke of the arm will advance both the wheels A and A_1, giving the reading 10; the notch n having now moved along, the click b_1 will remain inoperative until the reading is 19, when b_1 will again come into action and advance A_1 one tooth, giving the reading 20; and so on up to 90, when the notch m comes under the click b_2. To prevent the click b_2 from acting on the next forward stroke of the arm, which would make the reading 101 instead of 91, as it should be, a small strip i is fastened firmly to the end of the click b_2, its free end resting upon the click b_1. This strip prevents the click b_2 from acting until the click b_1 falls, which occurs when the reading is 99; on the next forward stroke the clicks b_1 and b_2 act, thus giving the reading 100. As the strip merely rests upon b_1, it cannot prevent its action at any time. If another wheel were added, its click would require a strip resting on the end of b_2. A substitute for these strips might be obtained by making the wheel A fast to the shaft a, and allowing the remaining wheels to turn loose upon it, thin disks, having the same contour as the notched edge of the wheel A, being placed between the wheels A_1A_2, A_2A_3, etc., and made fast to the shaft, the notches all being placed opposite n; thus the edges of the disks would keep the clicks b_2, b_3, etc., out of action, except when the figure 9 of the wheel A is opposite the slot, and the notches m, etc.,

are in proper position. A simpler form of counter will be described in § 270.

270. Intermittent Motion from Continuous Motion. The cases of intermittent motion thus far considered have been those in which a uniform reciprocating motion in one piece gives an intermittent circular or rectilinear motion to another, the click being the driver and the wheel the follower.

It is often required that a uniform circular motion of the driver shall produce an intermittent circular or rectilinear motion of the follower. The following examples will give some solutions of the problem:

Fig. 410 shows a combination by which the toothed wheel A is moved in the direction of the arrow, one tooth for every complete turn of the shaft d, the pawl B retaining the wheel in position when the tooth t on the shaft d is out of action. The stationary link adc forms the frame, and provides bearings for the shafts d and a, and a pin c for the pawl B. The arm e, placed by the side of the tooth upon the shaft, is arranged to clear the wheel A in its motion, and to lift the pawl B at the time when the tooth t comes into action wth the wheel, and to drop the pawl when the action of t ceases, i.e., when the wheel has been advanced one tooth. This is accomplished by attaching the piece n to the pawl, its contour in the raised position of the pawl being an arc of a circle about the center of the shaft d; its length is arranged to suit the above requirements. When the tooth t comes in contact with the wheel, the arm e, striking the piece n, raises the pawl (which is held in position by the spring s), and retains it in the raised position until the tooth t is ready to leave the wheel, when e, passing off from the end of n, allows the pawl to drop.

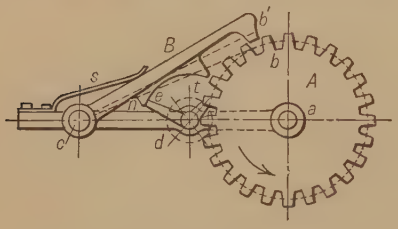

Fig. 410

In Fig. 411 the wheel A makes one-third of a revolution for every turn of the wheel bc, its period of rest being about one-half the period of revolution of bc. If we suppose A the follower, and to turn right-handed while the driver bc turns left-handed, one of the round pins b is just about to push ahead the long tooth of A, the circular retaining sector c being in such a position as to follow a right-handed motion of A. The first pin slides down the long tooth, and the other pins pass into and gear with the teeth b', the last pin passing off on the long tooth e, when the sector c will come in contact with the

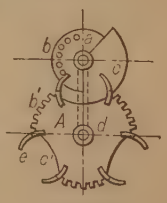

Fig. 411

arc c', and retain the wheel A until the wheel bc again reaches its present position.

Fig. 412 is a diagram of a mechanism known as a **Geneva stop.** The wheel A makes one-sixth of a revolution for one turn of the driver ac, the pin b working in the slots b' causing the motion of A; while the circular portion c of the driver, coming in contact with the corresponding circular hollows c', retains A in position when the tooth b is out of action. The wheel a is cut away just back of the pin b to provide clearance for the wheel A in its motion. If we close up one of the slots, as b', it will be found that the shaft a can only make a little over five and one-half revolutions in either direction before the pin b will strike the closed slot. This mechanism, when so modified, has been applied to watches to prevent overwinding, and is called the *Geneva stop*, the wheel a being attached to the spring-shaft so as to turn with it, while A turns on an axis d in the spring-barrel. The number of slots in A depends upon the number of times it is desired to turn the spring-shaft.

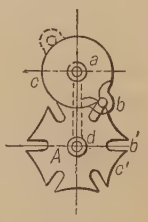

Fig. 412

By placing another pin opposite b in the wheel ac, as shown by dotted lines, and providing the necessary clearance, the wheel A could be moved through one-sixth of a turn for every half turn of ac.

A simple type of counter extensively used on water-meters is shown in Fig. 413. It consists of a series of wheels A, B, C, mounted side by

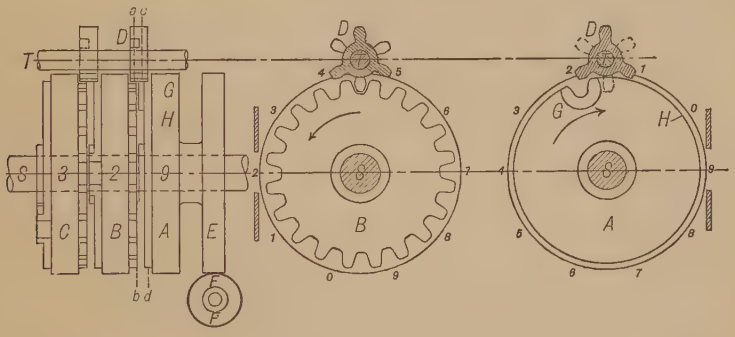

Fig. 413

side and turning loosely on the shaft S; or the first wheel to the right may be fast to the shaft and all the remaining wheels loose upon it. Each wheel is numbered on its face as in Fig. 409, and it is provided, as shown, that the middle row of figures appears in a suitable slot in the face of the counter. The first wheel A is attached to the worm-wheel E,

having 20 teeth and driven by the worm F geared to turn twice for one turn of the counter driving shaft.

On a parallel shaft T loose pinions D are arranged between each pair of wheels. Each pinion is supplied with six teeth on its left side extending over a little more than one-half its face and with three teeth, each alternate tooth being cut away, for the remainder of the face, as clearly shown in the sectional elevations. The middle elevation (Fig. 413) shows a view of the wheel B from the right of the line ab with the pinion D sectioned on the line cd. The right elevation shows a view of the wheel A from the left of the line ab with the pinion D sectioned on the line cd. The first wheel A, and all others except the last, at the left, have on their left sides a double tooth G, which is arranged to come in contact with the six-tooth portion of the pinion; the space between these teeth is extended through the brass plate which forms the left side of the number ring whose periphery H acts as a stop for the three-tooth portion of the pinion, as clearly shown in the figure to the right. Similarly on the right side of each wheel, except the first, is placed a wheel of 20 teeth gearing with the six-tooth part of the pinion, as shown in the middle figure. When the digit 9 on any wheel, except the one at the left, comes under the slot, the double tooth G is ready to come in contact with the pinion; as the digit 9 passes under the slot the tooth G starts the pinion, which is then free to make one-third of a turn and again become locked by the periphery H. Thus any wheel to the left receives one-tenth of a turn for every passage of the digit 9 on the wheel to its right. In the figure the reading 329 will change to 330 on the passing of the digit 9. This counter can be made to record oscillations by supplying its actuating shaft with a ten-tooth ratchet, arranged with a click to move one tooth for each double oscillation.

Figs. 414a and 414b show two methods of advancing the wheels A through a space corresponding to one tooth during a small part of a revolution of the shafts c; in this case the shafts are at right angles to each other. In Fig. 414a a raised circular ring with a small spiral

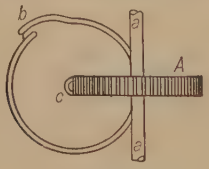

Fig. 414a

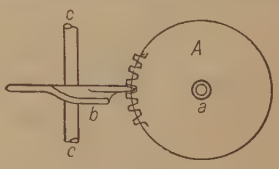

Fig. 414b

part b attached to a disk is made use of; the circular part of the ring retains the wheel in position, while the spiral part gives it its motion. In Fig. 414b the disk carried by the shaft cc has a part of its edge bent

helically at b; this helical part gives motion to the wheel, and the remaining part of the disk edge retains the wheel in position. By using a regular spiral, in Fig. 414a, and one turn of a helix, in Fig. 414b, the wheels A could be made to move uniformly through the space of one tooth during a uniform revolution of the shafts c.

In Fig. 415 the wheel A is arranged to turn the wheel B, on a shaft at right angles to that of A, through one-half a turn while it turns one-sixth of a turn, and to lock B during the remaining five-sixths of the turn.

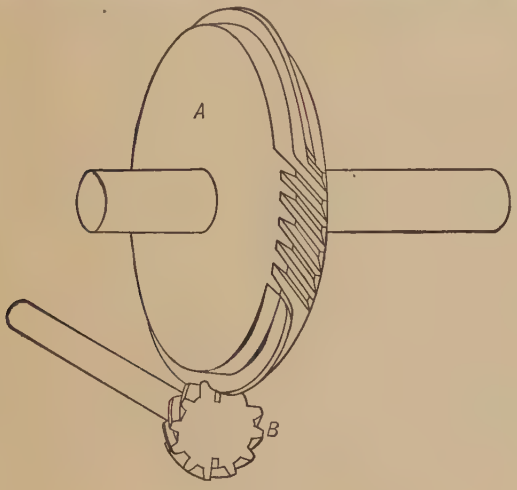

FIG. 415

Fig. 416 illustrates the **Star Wheel.** The wheel A, turns through a space corresponding to one tooth for each revolution of the arm carrying the pin b and turning on the shaft c. The pin b is often stationary, and the star wheel is moved past it; the action is then evidently the same, as the pin and wheel have the same relative motion in regard to each other during the time of action. The star wheel is often used on moving parts of machines to actuate some feed mechanism, as may be seen in cylinder-boring machines on the facing attachment, and in spinning-machinery.

FIG. 416

271. Cam and Slotted Sliding Bar. Fig. 417 shows an equilateral triangle abc, formed by three circular arcs, whose centers are at a, b, and c, the whole turning about the axis a, and producing an intermittent motion in the slotted piece B. The width of the slot is equal to the radius of the three circular arcs composing the three equal sides of the triangular cam A, and therefore the cam will always bear against both sides of the groove.

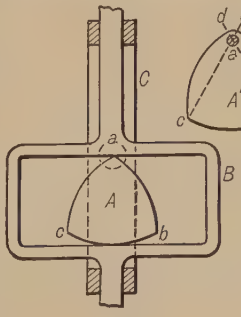

FIG. 417

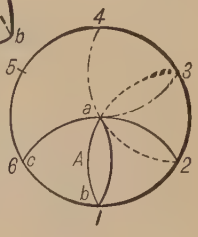

FIG. 418

If we imagine the cam to start from the position shown in Fig. 418 when b is at 1, the slotted piece B will remain at rest while b moves from 1 to 2 (one-sixth of the circle 1, 2 . . . 6), the cam edge bc merely sliding over the lower side of the slot. When b moves from 2 to 3, i.e., from the position of A, shown by light full lines, to that shown by dotted lines, the edge ab will act upon the upper side of the slot, and impart to B a motion similar to that obtained in Fig. 357, being that of a crank with an infinite connecting-rod; from 3 to 4 the point b will drive the upper side of the slot, ca sliding over the lower side, the motion here being also that of a connecting-rod with an infinite link, but decreasing instead of increasing as from 2 to 3. When b moves from 4 to 5 there is no motion in B; from 5 to 6, c acts upon the upper side of the slot, and B moves downward; from 6 to 1, ac acts on the upper side of the slot, and B moves downward to its starting position. The motion of B is accelerated from 5 to 6 and retarded from 6 to 1.

At A' a form of cam is shown where the shaft a is wholly contained in the cam. In this case draw the arcs de and cb from the axis of the shaft as a center, making ce equal to the width of the slot in B; from c as a center with a radius ce draw the arc eb, and note the point b where it cuts the arc cb; with the same radius and b as a center draw the arc dc, which will complete the cam. In this case the angle cab will not be equal to 60°, and the motions in their durations and extent will vary a little from those described above.

272. Locking Devices. The principle of the slotted sliding bar combined with that of the Geneva stop is applied in the shipper mechanism shown in Fig. 419, often used on machines where the motion is automatically reversed. The shipper bar B slides in the piece CC, which also provides a pivot a for the weighted lever wab. The end of the lever b opposite the weight w carries a pin which works in the grooved lug s on the shipper bar. In the present position of the pieces, the pin b is in the upper part of the slot, and the weight w, tending to fall under the action of gravity, holds it there, the shipper being thus effectually locked in its present position. If now the lever be turned left-handed about its axis a until the weight w is just a little to the left of a, gravity will carry the weight and lever into the dotted position shown, where it will be locked until the lever is turned right-handed. The principle of using a weight to complete the motion is very convenient, as the part of the machine actuating the shipper often stops before the belt is carried to the wheel which produces the reverse motion, and the machine is thus stopped. The motion can always be made sufficient to raise a

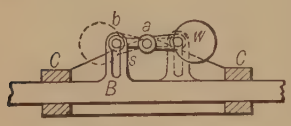

FIG. 419

weighted lever, as shown above, and the weight will, in falling, complete the motion of the shipper.

The device shown in Fig. 420, of which there may be many forms, serves to retain a wheel A in definite adjusted positions, its use being the same as that of the retaining-pawl shown in Fig. 394. The wheels B and A turn on the shafts c and a, respectively, carried by the link C, which is shown dotted, as it has been cut away in taking the section. Two positions of the wheel B will allow the teeth b of A to pass freely through its slotted opening, while any other position effectually locks the wheel A. The shape of the slot in B and the teeth of A are clearly shown in the figure.

Fig. 421 shows another device for locking the wheel A, the teeth of which are round pins; but in this case it is necessary to turn B once to pass a tooth of A. If we suppose the wheel A under the influence of

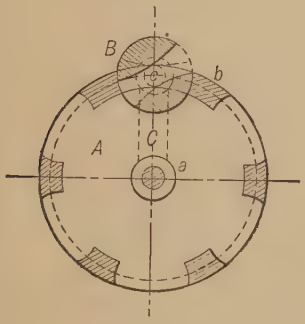

Fig. 420

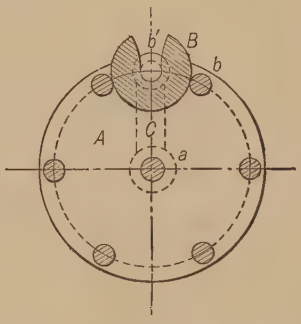

Fig. 421

a spring which tends to turn it right-handed, and then turn B uniformly either right- or left-handed, the wheel A will advance one tooth for each complete turn of B, a pin first slipping into the groove on the left and leaving it when the groove opens toward the right, the next pin then coming against the circular part of B opposite the groove. It will be noticed that while there are only six pins on the wheel A, yet there are twelve positions in which A can be locked, as a tooth may be in the bottom of the groove or two teeth may be bearing against the circular outside of B. Devices similar in principle to those shown in Figs. 420 and 421 are often used to adjust stops in connection with feed mechanisms.

Clicks and pawls as used in practice may have many different forms and arrangements; their shape depends very much upon their strength and the space in which they are to be placed, and the arrangement depends on the requirements in each case.

273. Escapements. An escapement is a combination in which a toothed wheel acts upon two distinct pieces or *pallets* attached to a reciprocating frame, it being so arranged that when one tooth escapes or ceases to drive its pallet, another tooth shall begin its action on the other pallet.

A simple form of escapement is shown in Fig. 422. The frame cc' is arranged to slide longitudinally in the bearings CC, which are attached to the bearing for the toothed wheel. The wheel a turns continually in the direction of the arrow, and is provided with three teeth, b, b', b'', the frame having two pallets, c and c'. In the position shown, the tooth b is just ceasing to drive the pallet c to the right, and is *escaping*, while the tooth b' is just coming in contact with the pallet c', when it will drive the frame to the left.

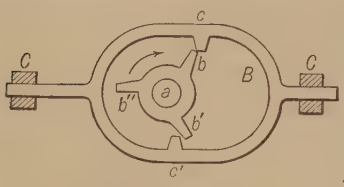

FIG. 422

While escapements are generally used to convert circular into reciprocating motion, as in the above example, the wheel being the driver, yet, in many cases, the action may be reversed. In Fig. 422, if we consider the frame to have a reciprocating motion and use it as the driver, the wheel will be made to turn in the opposite direction to that in which it would itself turn to produce reciprocating motion in the frame. It will be noticed also that there is a short interval at the beginning of each stroke of the frame in which no motion will be given to the wheel. It is clear that the wheel a must have 1, 3, 5, or some odd number of teeth upon its circumference.

274. The Crown-wheel Escapement. The crown-wheel escapement (Fig. 423) is used for causing a vibration in one axis by means of a rotation of another. The latter carries a crown wheel A, consisting of a circular band with an odd number of large teeth, like those of a splitting-saw, cut on its upper edge. The vibrating axis, o, or *verge* as it is often called, is located just above the teeth of the crown wheel, in a plane at right angles to the vertical wheel axis. The verge carries two pallets, b and b_1, located in planes passing through its axis, the distance between them being arranged so that they may engage alternately with teeth on opposite sides of the wheel. If the crown wheel be made to revolve under the action of a spring or weight, the alternate action of the teeth on the pallets will cause a reciprocating motion in the verge. The rapidity of this

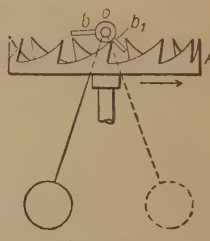

FIG. 423

vibration depends upon the inertia of the verge, which may be adjusted by attaching to it a suitably weighted arm.

This escapement, having the disadvantage of causing a recoil in the wheel as the vibrating arm cannot be suddenly stopped, is not used in timepieces, and but rarely in other places. It is of interest, however, as being the first contrivance used in a clock for measuring time.

275. The Anchor Escapement. The *anchor escapement* as applied in clocks is shown in Fig. 424. The escape-wheel A_1 turns in the direction of the arrow and is supplied with long pointed teeth. The pallets are connected to the vibrating axis or verge C_1 by means of the arms d_1C_1 and e_1C_1, the axis of the verge and wheel being parallel to each

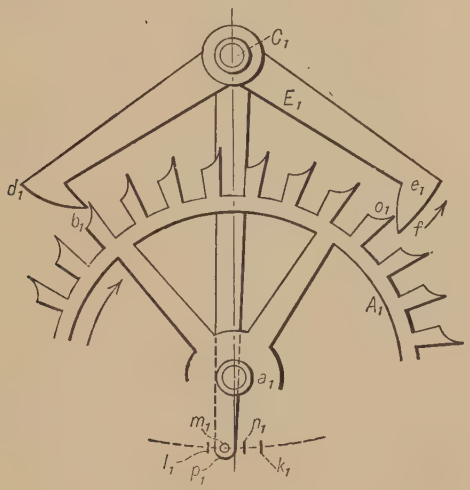

FIG. 424

other. The verge is supplied at its back end with an arm C_1p_1, carrying a pin p_1 at its lower end. This pin works in a slot in the pendulum-rod, not shown. The resemblance of the two pallet arms combined with the upright arm to an anchor gave rise to the name "anchor escapement." The left-hand pallet, d_1, is so shaped that all the normals to its surface pass above the verge axis C_1, while all the normals to the right-hand pallet, e_1, pass below the axis C_1. Thus an upward movement of either pallet will allow the wheel to turn in the direction of the arrow, or, the wheel turning in the direction of the arrow, will, when the tooth b_1 is in contact with the pallet d_1, cause a left-handed swing of the anchor; and when b_1 has passed off from d_1 and o_1 reaches the right-hand pallet, as shown, a right-handed swing will be given to the anchor. As the pendulum cannot be suddenly stopped after a

tooth has escaped from a pallet, the tooth that strikes the other pallet is subject to a slight recoil before it can move in the proper direction, which motion begins when the pendulum commences its return swing. The action of the escape-wheel on the pendulum is as follows:

Suppose the points l_1 and k_1 to show extreme positions of the point p_1, and suppose the pendulum and point p_1 to be moving to the left; the tooth b_1 has just escaped from the pallet d_1, and o_1 has impinged on e_1, as shown, the point p_1 having reached the position m_1. The recoil now begins, the pallet e_1 moving back the tooth o_1, while p_1 goes from m_1 to l_1. The pendulum then swings to the right and the pallet e_1 is urged upward by the tooth o_1, thus urging the pendulum to the right while p_1 passes from l_1 to n_1, when o_1 escapes. Recoil then occurs on the pallet d_1 from n_1 to k_1, and from k_1 to m_1 an impulse is given to the pendulum to the left, when the above-described cycle will be repeated. As the space through which the pendulum is urged on exceeds that through which it is held back, the action of the escape-wheel keeps the pendulum vibrating. This alternate action *with* and *against* the pendulum prevents it from being, as it should be, the sole regulator of the speed of revolution of the escape-wheel; for its own time of vibration, instead of depending only upon its length, will also depend upon the force urging the escape-wheel round. Therefore any change in the maintaining force will disturb the rate of the clock.

276. Dead-beat Escapement. The objectionable feature of the anchor escapement is removed in Graham's *dead-beat* escapement, shown in Fig. 425. The improvement consists in making the outline of the lower surface, *db*, of the left-hand pallet, and the upper surface of the right-hand pallet, arcs of a circle about C, the verge axis; the oblique surfaces b and f complete the pallets. The construction indicated by dotted lines in the figure insures that the oblique surfaces of the pallets shall make equal angles, in their normal position, with the tangents bC and fC to the wheel circle not shown. If we suppose the limits of the swing of the point p to be l and k, the action of the escape-wheel on the pendulum is as follows:

The pendulum being in its right extreme position, the tooth b is bearing against the circular portion of the pallet d; as the pendulum swings to the left under the action of gravity, the tooth b will begin to move along the inclined face of the pallet when the center line has reached n, and will urge the pendulum onward to m, where the tooth leaves the pallet, and another tooth o comes in contact with the circular part of the pallet e, which, with the exception of a slight friction between it and the point of the tooth, will leave the pendulum free to move onward, the wheel being locked in position. On the return

swing of the pendulum, the inclined part of the pallet *e* urges the pendulum from *m* to *n*. Hence there is no recoil, and the only action against the pendulum is the very minute friction between the teeth and the pallets. The impulse is here given through an arc *mn*, very nearly bisected by the middle point of the swing of the pendulum, which is also an advantage. The term "dead-beat" has been applied

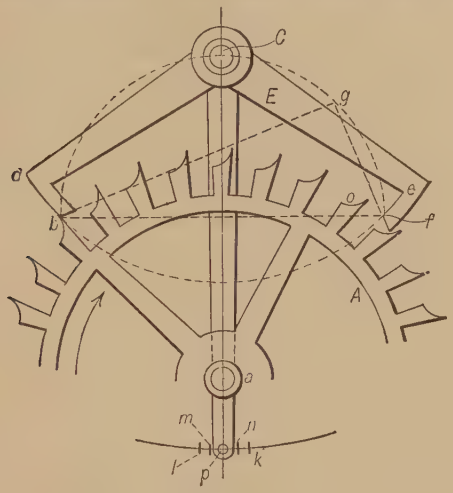

FIG. 425

because the second hand, which is fitted to the escape-wheel, stops so completely when the tooth falls upon the circular portion of a pallet, there being no recoil or subsequent trembling such as occurs in other escapements.

In watches the pendulum is replaced by a balance-wheel swinging backward and forward on an arbor under the action of a very light coiled spring, often called a "hair-spring" the pivots of the arbor are very nicely made, so that they turn with very slight friction.

277. The Graham Cylinder Escapement. This form of escapement is used in the Geneva watches. Here the balance verge *o* (Fig. 426) has attached to it a very thin cyclindrical shell *rs* centered at *o*, the axis of the verge, and the point of the tooth *b* can rest either on the outside or inside of the cylinder during a part of the swing of the balance. As the cylinder turns in the direction of the arrow (Fig. 426a), the wheel also being urged in the direction of its arrow, the inclined surface of the tooth *bc* comes under the edge *s* of the cylinder, and thus urges the balance onward; this gives one impulse, as shown in Fig. 426b. The tooth then passes *s*, flies into

FIG. 426a

FIG. 426b

the cylinder, and is stopped by the concave surface near r. In the opposite swing of the balance the tooth escapes from the cylinder, the inclined surface pushing r upward, which gives the other impulse in the opposite direction to the first; the action is then repeated by the next tooth of the wheel.

This escapement is, in its action, nearly identical to the *dead-beat;* but the impulse is here given through small equal arcs, situated at equal distances from the middle point of the swing.

278. The Chronometer Escapement is shown in Fig. 427. Here the verge o carries two circular plates, one of which carries a projection p, which serves to operate the detent d; the other carries a projection n, which swings freely by the teeth of the escape-wheel when a

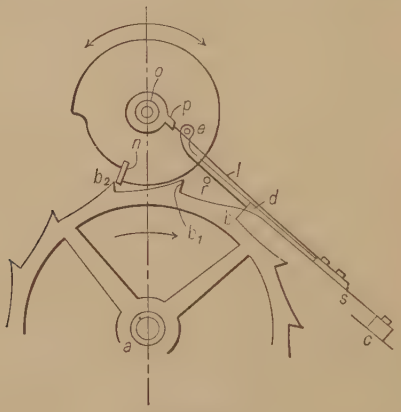

FIG. 427

tooth is resting upon the pallet d, but encounters a tooth when the wheel is in any other position.

The detent d has a compound construction and consists of four parts:

1° The locking-stone d, a piece of ruby on which the tooth of the escape-wheel rests.

2° The discharging-spring l, a very fine strip of hammered gold.

3° A spring s on which the detent swings, and which attaches the whole to the frame of the chronometer.

4° A support e, attached to the body of the detent, to prevent the strip l from bending upward.

A pin r prevents the detent from approaching too near the wheel.

The action of the escapement is as follows: On a right-hand swing of the balance the projection p meets the light strip l, which, bending from its point of attachment to the detent, offers but very little resist-

ance to the balance. On the return swing of the balance, the projection p meets the strip l, which can now only bend from e, and raises the detent d from its support r, thus allowing the tooth b to escape, the escape-wheel being urged in the direction of the arrow. While this is occurring, the tooth b_2 encounters the projection n, and gives an impulse to the balance; the detent meanwhile has dropped back under the influence of the spring s, and catches the next tooth of the wheel b_1.

It will be noticed that the impulse is given to the balance immediately after it has been subject to the resistance of unlocking the detent d, thus immediately compensating this resistance; also that the impulse is given at every alternate swing of the balance.

The motion of the balance is so adjusted that the impulse is given through equal distances on each side of the middle of its swing.

PROBLEMS

1. Referring to Fig. 1, page 7, if OR is a crank 18 ins. long turning 90 r.p.m. find the displacement and acceleration of point T when $\theta = 60$ degrees.

2. If the periphery speed of a drill 2 ins. in diameter is not to exceed 40 ft. per minute what is the maximum number of r.p.m. at which it may be run?

3. (*a*) What is the angular speed of this pulley in radians per second?

(*b*) What is the linear speed of a point M on the circumference in feet per minute?

(*c*) What is the ratio of the linear speed of P to that of M?

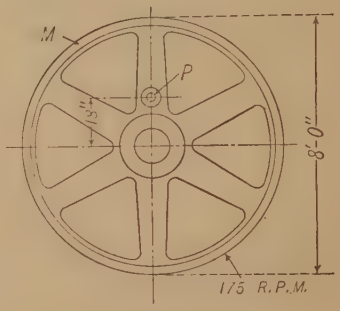

PROB. 3

4. Assume that in turning steel shafting a cutting speed of 80 ft. per minute is allowable. How fast must a piece of 6-in. shaft turn to give this speed?

5. The Pelton water wheel shown in the figure is driven by a jet of water having a velocity of 90 feet per second. The linear speed of the center line of the buckets is 0.6 that of the water. What is the diameter in inches to the center line of the buckets if the wheel is fast to a shaft that turns 100 r.p.m.?

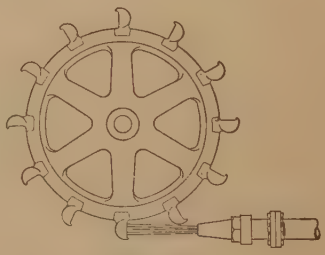

PROB 5

6. This emery wheel is 6 ins. in diameter and makes 2546 r.p.m.

(*a*) What is its surface speed in ft. per minute?

(*b*) If the wheel turns as indicated and the piece of cast iron D is fed as shown by the arrow at the rate of 30 ft. per minute, what is the cutting speed?

(*c*) If D is fed in the same direction and at the same speed as before and if the emery wheel turns 2546 r.p.m. but in a clockwise direction, what is the cutting speed?

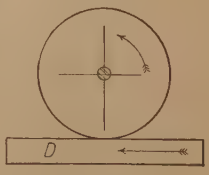

PROB. 6

7. A pulley makes 400 r.p.m. A point on its outer surface has a linear speed of 4000 ft. per minute. What is the diameter?

8. The sketch shows a grindstone operated by a treadle. If π is taken as 3 and the average speed of the surface of the stone is 540 ft. per minute, through what distance does the point F on the treadle move in 15 minutes? Through how many radians does it move in that time?

Note. — The point E is on the vertical center line YY when the treadle is in the highest and lowest positions.

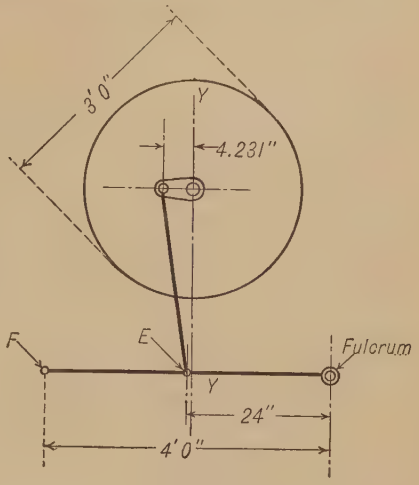

PROB. 8

9. On a revolving wheel are two points located on the same radial line. If the wheel has an angular speed of 1000 radians per minute and if the linear speed of one point is 3500 ins. per minute greater than the other, how far apart are the points?

10. The shaft of a centrifugal drying machine has an angular speed of 4398.24 radians per minute. What is the linear speed of a point 2 ft. out from the center of the shaft in ft. per minute and how many r.p.m. does the dryer make?

11. A bell-crank lever of the type shown in Fig. 17 has arms that are 8 and 10 ins. long and make an angle of 60 degrees with each other. If the long arm is horizontal and has a 100-lb. weight suspended from its end, what vertical pull must be exerted at the end of the short arm to balance the 100-lb. weight?

12. In a rocker of the type shown in Fig. 18 the line of motion of the end of one arm is vertical while the line of motion of the end of the other is 45 degrees with the horizontal. One arm is 5 ins. long and the motion of its end along the vertical line is $2\frac{1}{2}$ ins., the motion of the end of the other arm is $1\frac{1}{2}$ ins. along the 45-degree line. If the ends of the arms of the bell crank swing equally either side of the lines of motion, locate graphically the fulcrum of the rocker and show the center lines of the arms when in their mid-positions.

13. The main driving pulley of a broaching machine is 18 ins. in diameter and turns at a speed of 400 r.p.m. If the pulley is driven by a belt from a 10-H.P. motor developing its full rated power, what is the effective pull of the belt?

14. A shaft making 200 r.p.m. carries a pulley 36 ins. in diameter driven by a belt which transmits 5 horse power. What is the effective pull in the belt? What should be the diameter of the pulley if the effective pull is to be 50 lbs.?

15. A 6-in. belt transmits 8 horse power, when running over a pulley 20 ins. in diameter running 200 r.p.m. If the maximum allowable tension is 80 lbs. per inch of width and if the sum of the tensions is assumed to be constant, with what tension was the belt put on the pulleys?

16. What is the width of a fabric belt which transmits 45 horse power when running on a 30-in. pulley which turns 550 r.p.m.? The belt was put on with a tension of 70 lbs. per inch, the maximum tension is not to exceed 95 lbs. per inch, neglecting centrifugal force, and it is assumed that the sum of the tensions is a constant.

17. Determine the width of a single belt to carry 40 horse power when running on a pulley 48 ins. in diameter which turns 300 r.p.m. The maximum tension per inch of width for a single belt is 65 lbs., neglecting centrifugal force, and it is assumed that $T_1 = 2\frac{1}{3}\,T_2$. Determine the width of this belt, using the millwrights' rule.

18. A 3-in. belt is designed to stand a difference in tension of 50 lbs. per inch of width, neglecting centrifugal force. Find the least speed at which it can be driven in order to transmit 20 horse power.

19. To what difference in tension on the two sides of a belt does the millwrights' rule correspond? If the maximum tension for a single belt is 65 lbs. per inch of width, and for a double belt 150 lbs. per inch of width, what is the value of $\frac{T_1}{T_2}$ in a belt calculated by the millwrights' rule? Answer both parts of the problem for both single and double belt, neglecting the effect of centrifugal force.

20. Shaft A, turning 120 r.p.m., drives shaft B at speeds of 80, 120, 180 and 240 r.p.m. by means of a pair of stepped pulleys and a crossed belt. The diameter of the largest step on the driving pulley is 18 ins. Calculate the diameters of all the steps of both pulleys.

21. Two shafts, each carrying a four-step pulley, are to be connected by a crossed belt. The driving shaft is to turn 150 r.p.m. while the driven shaft is to turn 50, 150, 250 and 600 r.p.m. The smallest step of the driver is 10 ins. in diameter. Find the diameters of all the steps.

22. Solve the preceding problem if an open belt is used instead of a crossed belt and if the shafts are 30 ins. apart.

23. Two shafts carrying five-step pulleys are to be connected by a crossed belt. The driver is to turn 150 r.p.m. while the follower is to have speeds of 50, 100, 150, 200 and 250 r.p.m. If the smallest step on either pulley is 8 ins. in diameter, find the diameters of all the steps to two decimal places.

24. The feed mechanism of an upright drill is operated by an open belt running on three-step pulleys. The driving shaft turns 150 r.p.m. while the driven shaft turns 150, 450 and 900 r.p.m., the two shafts being 15 ins. apart. If the largest diameter of the driver is 18 ins. find the diameters of all the steps. If the steps of these pulleys had been calculated for a crossed belt but an open belt had been used on them the belt would have been found too short to run on some of the steps. State approximately how much too short it would have been for the worst case.

25. A lathe having a five-step pulley is driven by a belt (assumed to be crossed) from a pulley of the same size on the countershaft. The countershaft is to have a constant speed, and the lathe is to have speeds of 60 r.p.m. and 135 r.p.m. when the belt is on the steps either side of the center step. If the minimum speed is 40 r.p.m. and the smallest diameter 4 ins., find proper speed of countershaft, maximum speed of lathe, and diameter of all steps on the pulleys.

26. Each of a pair of equal five-stepped pulleys has diameters 20, $17\frac{5}{8}$, $15\frac{1}{4}$, $12\frac{7}{8}$, $10\frac{1}{2}$ ins. Were these pulleys designed for an open belt or a crossed belt? If the driving shaft turns 500 r.p.m. calculate the five speeds of the driven shaft.

27. In a pair of stepped pulleys the driver has diameters of 31.62, 25.5, 20.53, 10 ins. The smallest diameter of the driven pulley is 7.91 ins. and its largest diameter 30 ins. Is the belt crossed or open? Calculate the distance between centers of the shafts and the other two diameters of the driven pulley.

28. Two shafts are connected by a crossed belt running on a pair of speed cones. The driving shaft has a constant speed of 135 r.p.m. while the driven shaft is to have a range of speeds from 45 to 300 r.p.m., the speeds to increase in arithmetical progression as the belt is moved equal distances along the cones. The smallest diameter of the driving cone is 3 ins. Find the diameters of the cones at the ends and at two intermediate points. Plot the cones ($\frac{1}{4}$ size) if their length is 24 ins.

29. A rope drive composed of 15 ropes is to transmit 120 horse power. If the pitch diameter of one of the sheaves is 4 ft. and if its angular speed is 1500 radians per minute, what is the effective pull in each rope?

30. A rope drive (Multiple System) consisting of 15 ropes is transmitting 200 horse power when the speed of the ropes is 1100 ft. per minute. The maximum tension per rope is 650 lbs. which is $\frac{1}{4}$ the breaking strength of the rope (expressed as, "a factor of safety of 4"). Find the ratio $\frac{T_1}{T_2}$. Suppose that 3 of the ropes should break, the remaining ropes carrying the whole load. If the ratio $\frac{T_1}{T_2}$ stays as before, what does the maximum tension become and what the factor of safety on the rope?

31. A motor running 500 r.p.m. transmits 3 horse power through a chain drive. The pitch diameter of the driving sprocket is 3 ins. What is the effective pull in the chain and what is the maximum tension neglecting centrifugal force?

32. A chain drive is transmitting 3 horse power when the speed of the chain is 900 ft. per minute. What is the effective pull in the chain? Suppose the speed of the chain be increased to 1200 ft. per minute, if the power transmitted remains the same as before, what is the effective pull?

33. How many r.p.m. does B make?

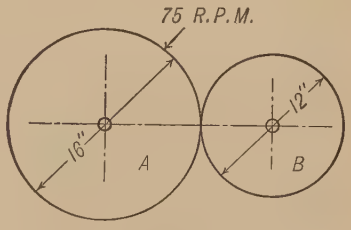

PROB. 33

34. Angular speed of $S = \frac{1}{3}$ of the angular speed of T. Calculate and find graphically the diameters of cylinders to connect them:

(*a*) When they turn as shown by the full arrows.

(*b*) When they turn as shown by the dotted arrows.

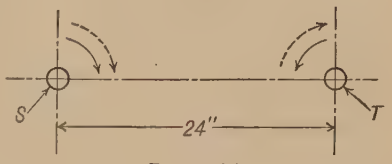

PROB. 34

35. A and B are rolling cylinders connecting the shafts S and T. C and E are cylinders fast to these shafts and slipping on each other at P. Find the diameters of C and E if the surface speed of E is twice that of C.

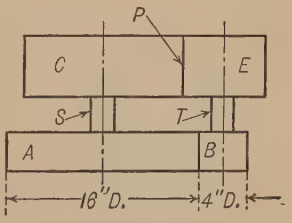

PROB. 35

36. The shaft of a grindstone is mounted on rollers, as shown. If the circumference of the stone has a speed of 628.32 ft. per minute, find its r.p.m. If the angular speed of the rollers is 209.44 radians per minute, find their diameter.

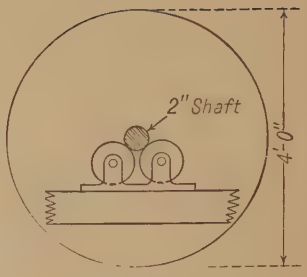

PROB. 36

37. How far from the axis of T will the center of the roller R be located if the angular speed of shaft S is three times as great as that of T?

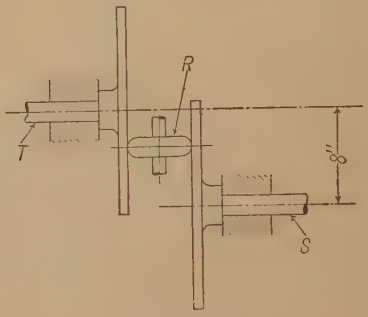

PROB. 37

38. A and B are two shafts at right angles, in the same vertical plane. C is a disk carried by a supporting yoke on a horizontal shaft arranged so that C is always in contact with the equal conoids on A and B. A turns at a constant speed of 60 r.p.m. What is the maximum speed of B? What is the minimum speed of B? What is the speed of B when the yoke supporting C has turned 30 degrees from its present position? (Assume no slipping.)

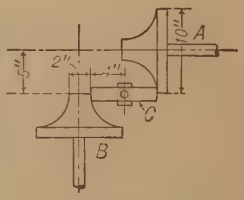

PROB. 38

39. A turns 100 and B 150 r.p.m. as shown and are connected by rolling cones. Calculate the apex angle of each cone. If the base of cone on A is 3 ins. from the vertex, calculate the diameters of both cones. Solve also graphically

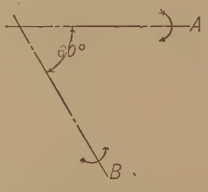

PROB. 39

PROB. 40

40. Two shafts A and B are connected by rolling cones and turn as shown. A makes 300 r.p.m. while B makes 100 r.p.m. Calculate the apex angle of each cone and the diameter of each base if the base of cone B is 2 ins. from the vertex. Solve also graphically.

41. Shaft S makes 180 r.p.m. and shaft T makes 60 r.p.m. Draw a pair of frustra of cones to connect them. Base of smaller cone 1 in. in diameter. Element of contact 1 in. long.

(*a*) When the shafts turn as shown by the full arrows.

(*b*) When they turn as shown by the dotted arrows.

PROB. 41

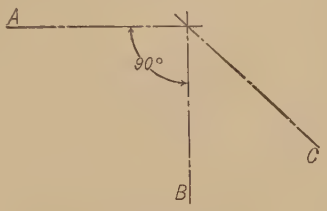

PROB. 42

42. Shafts A, B and C are connected by cones in external rolling contact so that the revolutions $A : B : C = 3 : 2 : 4$. If the diameter of cone B is 6 ins. draw in the three cones giving the diameters of cones A and C. (Show method clearly.)

43. Given a 4-pitch gear of 24 teeth. The addendum equals the module, the clearance is to be $\frac{1}{8}$ of the addendum and the back lash is to be 2 per cent of the circular pitch. Calculate the following, giving results to three decimal places: the pitch diameter, the diameter of the blank gear before cutting the teeth (addendum diameter), the depth of teeth, the backlash and the width of tooth and width of space.

44. In the given position

$$\frac{\text{angular speed of } A}{\text{angular speed of } B}$$

is equal to the angular speed ratio of what two rolling cylinders? Prove that this is so. (Make diagram full size.)

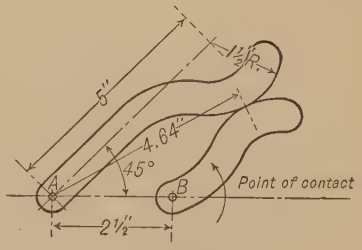

PROB. 44

45. A pinion 6-ins. in pitch diameter is to drive a rack. The flank of the rack is an arc of a circle $2\frac{1}{2}$-ins. in radius with its center $1\frac{1}{4}$ ins. below pitch line of rack as shown. Find two points on the face of the pinion starting with points on given flank $\frac{1}{4}$ and $\frac{1}{2}$ in. from the pitch point. Assuming an addendum of $\frac{1}{2}$ in. on pinion show arc of recess on the rack's pitch line.

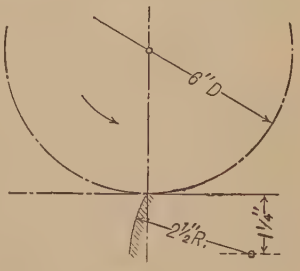

PROB. 45

46. Given this flank of a rack, a straight line at 15 degrees with line of centers, find two points on the face of the pinion about $\frac{1}{4}$ and $\frac{1}{2}$ in. away from the pitch line, and show path of contact in recess if the pinion drives turning right-handed.

PROB. 46

47. A pinion 5 ins. in diameter is to drive an annular 12 ins. in diameter. The flanks of the annular's teeth are arcs of circles with 2-in. radius located as shown. Find three points, as *a*, *b*, *c*, on the face of the pinion. Show the path of contact in recess if the pinion's addendum is 1 in. Find the arc of recess and the angles of recess, and the length of the acting flank.

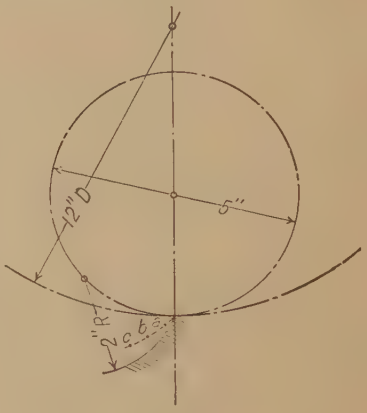

PROB. 47

48. A pinion 10-ins. in diameter with radial flanks is to be driven by a pinion 4-in. diameter also having radial flank teeth.

1° Find the respective faces.

2° If the addendums = $\frac{1}{2}$ in. show the path of contact; the angles of approach and recess; the maximum angles of obliquity in approach and recess; and the lengths of the acting flanks.

3° Draw the true clearing curve which the 4-in. pinion's tooth would trace

49. Diameter of pitch circle of pinion = $3\frac{1}{2}$ ins. Diameter of pitch circle of annular = 8 ins. The flank of the annular is to be the arc of a circle $1\frac{1}{4}$ ins. in radius as shown. Find two points on the face of the pinion starting with points on given flank $\frac{3}{8}$ and $\frac{3}{4}$ in. from the pitch point. Show path of contact in approach if annular drives left-handed.

PROB. 49

50. Involute gears, $22\frac{1}{2}$ degrees obliquity, 1-pitch, addendum = $\frac{3}{4}$ the module, clearance = $\frac{1}{8}$ the module, no backlash. A pinion having 9 teeth, turning clockwise, is to drive a gear of 12 teeth. Indicate the path of contact, and angles of approach and recess for each gear, also give the ratio of the arc of action to the circular pitch. Draw two teeth on each gear, having a pair of teeth in contact at the pitch point. Indicate the acting flank of the teeth on each gear.

51. Find the diameter and number of teeth of the smallest 3-pitch pinion with 20 degrees obliquity, which would allow an arc of recess = arc of approach = the circular pitch, and draw its pitch and addendum circles. If the pinion drives a rack what is the greatest allowable addendum for the rack?

52. Involute gears, 15 degrees obliquity; a 30-tooth pinion 2-pitch is to drive a rack. How long can the arc of approach be? Can the arc of recess equal the circular pitch and why?

53. An involute gear with 21 teeth, 3-pitch, 15 degrees obliquity, has an addendum diameter of $7\frac{1}{2}$ ins. Draw its base circle and pitch circle. Could two such gears properly be used to connect two shafts $7\frac{1}{4}$ ins. apart? Give reason for answer.

54. Involute gears, 2-pitch, 15 degrees obliquity. A 24-tooth pinion is to drive a 32-tooth annular. The arc of approach to be equal to $1\frac{1}{2}$ the pitch and arc of recess to be equal to the circular pitch. Draw the addendum circles. Is each of these arcs possible; (explain clearly the steps by which this is determined). What is the limit of the path of contact in approach and in recess and why?

55. Two cycloidal gears with 10 and 12 teeth respectively; 2-pitch; radial flanks on each.

1° Draw the pitch circles and the describing circles and give their diameters.

2° If the addendum = $\frac{1}{2}$ in. and the 10-tooth pinion drives turning right handed show the path of contact.

3° How long is the arc of action in terms of the pitch? How long must it be to just give perfect action?

56. A pinion with 6 teeth 1-pitch is to drive one with 8 teeth. Radial flanks on 8-tooth and the same size describing circle for the flanks of the 6-tooth. The arc of approach to be $\frac{5}{8}$ of the pitch and the arc of recess to be $\frac{3}{4}$ of the pitch.

1° Find the maximum angles of obliquity in approach and in recess in degrees.

2° Is the given arc of action possible?

57. Cycloidal Gears. Interchangeable Set. 3-pitch. Radial flanks on a 15-tooth gear. Addendum equals module. Clearance equals $\frac{1}{8}$ of the addendum. An 18-tooth pinion drives a 39-tooth annular. Show path of contact. How many teeth would there be in the smallest annular that would gear with the 18-tooth pinion? Show path of contact in this case.

58. In a $\frac{3}{2}$-pitch, interchangeable set of cycloidal gears with addendum the same on all gears, it is found that two 8-tooth pinions will give a path of contact 2 inches long. Could one of the 8-tooth pinions properly drive a 7-tooth pinion of the set?

59. A pin-gear 1-pitch with 8 pins is to be driven by a rack. The pins are to be one-half the pitch in diameter, and the addendum on the rack's teeth is $1\frac{1}{2}$ ins. Find the true path of contact. Also draw the teeth for the rack and the pins for the gear, assuming no back lash, and a clearance of 0.1 in.

60. A 6-tooth 1-pitch cycloidal gear has its flank describing circle equal to the pitch circle. It is to drive another 6-tooth gear like itself. Draw the addendum circles so that the arcs of approach and recess are each equal to $\frac{3}{4}$ of the pitch, and show the path of contact. What would be the shapes of the teeth?

61. Shaft A turns 120 r.p.m. in the direction shown and drives shaft B by means of an open belt running on the right-hand steps of the pulleys. Shaft C is driven from B by a pair of gears so that C turns 3 times for every 2 turns of B. Gear D has 26 teeth while E has 78 teeth. Shaft F carries a bevel gear of 12 teeth which drives one of 120 teeth on shaft G. Shaft G also carries H, a 4-pitch, 16-tooth gear which is in mesh with a sliding rack. What is the speed of the rack in inches per minute and does it move to the right or left?

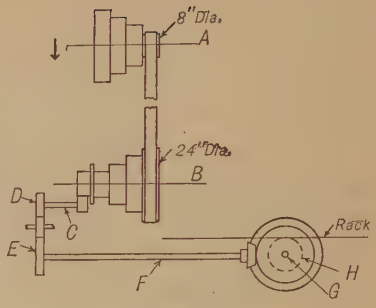

PROB. 61

62. In a broaching machine, the shaft A carries a pulley 24 ins. in diameter which is driven by a belt from a 12-in. pulley on the countershaft overhead, the latter turning 150 r.p.m. The gears B and D have 12 teeth each, while C and E have 60 teeth. Gear E is fast to F, which has 10 teeth and a circular pitch of 1.047 ins. and which engages with rack G to which is attached the broach. Find the speed with which the broach is drawn through the work in inches per minute.

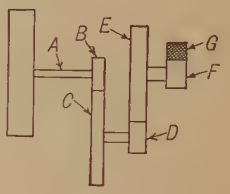

PROB. 62

63. In a brick-making machine is found this train of gears. A motor carrying pulley E, which is 6 ins. in diameter, drives the machine. The wide-faced roller F, 12 ins. in diameter, drives a conveyor belt. If the motor runs at 1200 r.p.m. what is the speed of the conveyor belt in ft. per minute? (Neglect the thickness of the belt.)

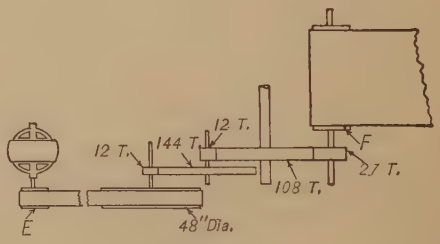

PROB. 63

64. In a crane, the chain barrel is driven by a motor on the spindle of which is keyed a pinion of 14 teeth. This gears with a wheel of 68 teeth keyed to the same spindle as a pinion of 12 teeth. The last wheel gears with a wheel of 50 teeth keyed to the same spindle as a wheel of 25 teeth, and the latter gears with a wheel of 54 teeth keyed to the chain barrel spindle. Chain barrel is $16\frac{1}{2}$-ins. in pitch diameter. Sketch the arrangement and find r.p.m. of motor when 20 ft. of chain are wound on drum per minute.

65. Effective pull on the belt is 250 lbs. $W = 7000$ lbs. A is 23 ins. in diameter. B, D, and F each have 18 teeth. $E = 63$ teeth; $G = 50$ teeth. H is 20 inches in pitch diameter. If there is a loss of power of 60 per cent, how many teeth must there be in gear C? Which is the tight side of the belt?

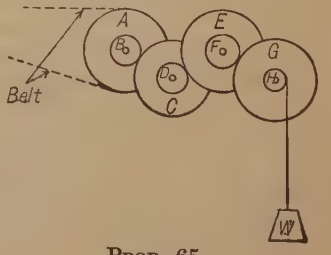

PROB. 65

66. Sketch shows side elevation of a molding machine. The stock is fed through rolls A to cutter C which is driven by a quarter turn belt as shown. Rolls A are $4\frac{1}{2}$ ins. in diameter, the upper one only being power driven. If the cutter C is 6 ins. in diameter, find the feed of the stock per revolution of cutter and the relative speed of cutter and work. (Cutter is shown behind the work.)

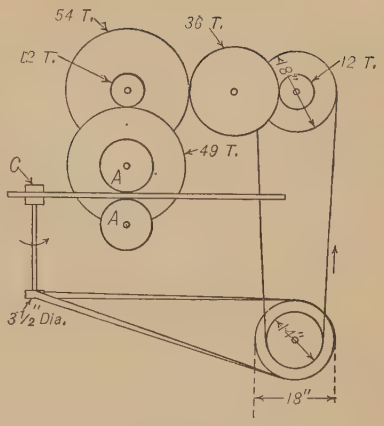

PROB. 66

67. A is an annular gear having 77 teeth, driving pinion B having 12 teeth. Numbers of teeth on the other gears as are given in the figure. If A makes 15 r.p.m. find the rate of slip between the cylinders R and S in feet per second.

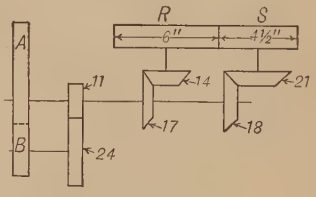

PROB. 67

68. The back gears of an engine lathe train are to give a reduction in the ratio of $\frac{3}{7}$. Arrange a train to give this, using no wheel of less than 15 teeth. First pair of gears 4-pitch, second pair 3-pitch. Make reduction of speed by the two pairs as nearly equal as possible.

69. $\dfrac{\text{Rev. } B}{\text{Rev. } A} = \dfrac{19}{1}$; find suitable numbers of teeth for the four gears of this train, having all of the same pitch. No gear to have more than 75 teeth nor less than 10 teeth.

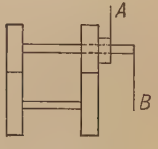

PROB. 69

70. Shaft S has a constant speed of 100 r.p.m. Gears F, G, and H form a unit free to slide, but not to turn on shaft S_1. S_1 is to have speeds of 20, 200 and 860 r.p.m. Gear H has 80 teeth. Find numbers of teeth on all gears if they are all of the same pitch, and if gears A and B are equal. The slowest speed of S_1 is when E and H are in mesh.

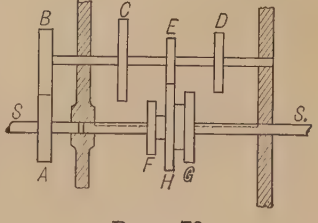

PROB. 70

71. The sketch shows a nest of spur gears, each pair being always in mesh and all gears of the same pitch. F, G, and H form a unit keyed to shaft B. C, D, and E are loose on shaft A, but may be locked to the shaft one at a time. Find the numbers of teeth on all gears if the revolutions of B for one of A are to be $\frac{1}{2}$, $1\frac{1}{4}$, and $2\frac{1}{2}$ as C, D and E respectively are keyed to A. No gear to have less than 14 teeth.

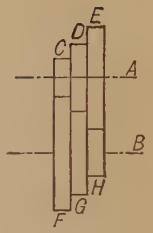

PROB. 71

72. Both gears on both shafts A and B are fast. The three gears on shaft C are fast together but not to the shaft and may be moved along shaft C as a unit. Shaft A has a constant speed of 60 r.p.m. and speeds of B are to be 240, 60 and 15 r.p.m. Find suitable numbers of teeth in all gears if they are all 4-pitch.

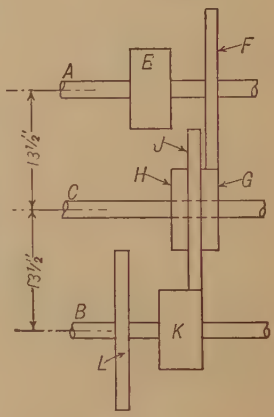

PROB. 72

73. The value of a train is to be approximately 113, with an allowable variation of 1. Find the least number of pairs and sketch the train, indicating the numbers of teeth on each gear. No gear to have more than 50 teeth nor less than 12 teeth.

74. A, B, and C are gears having teeth as shown.

1° If A turns $+4$ and arm turns -3, find turns of B and C.

2° If A is not to turn and B turns $+30$, find turns of the arm.

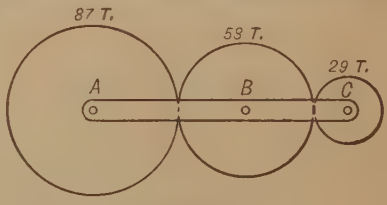

PROB. 74

75. Gear A is fixed. The arm turns about the shaft on which A is located. Find the number of teeth on gear C if it makes three times as many absolute turns as B does but in the opposite direction.

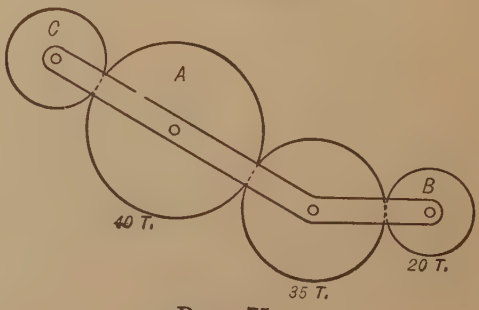

PROB. 75

76. In this roller bearing D represents the fixed bearing in which the rollers are supported while S is the shaft. Assuming that there is pure rolling contact between the shaft and the rollers, and between the rollers and D, find the ratio of speed at which roller cage revolves to speed at which shaft revolves.

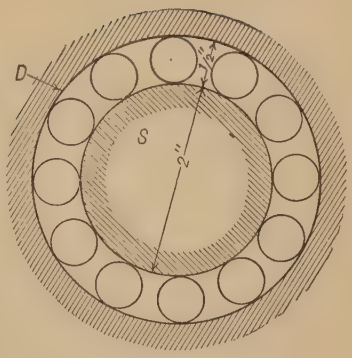

PROB. 76

77. 1° If A turns $+3$ and the arm -5, find the turns of B, C, and D.

2° Suppose two idlers to be used between E and D, other conditions remaining as before, find the turns of D.

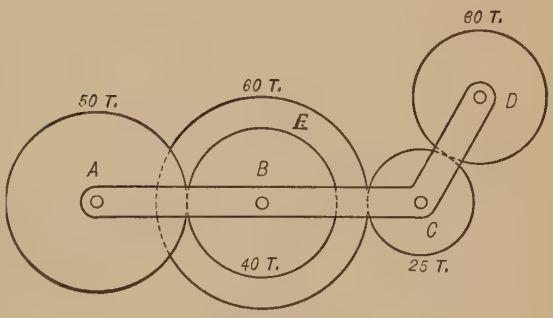

PROB. 77

78. If A turns $+38$ times, how many turns does the arm make?

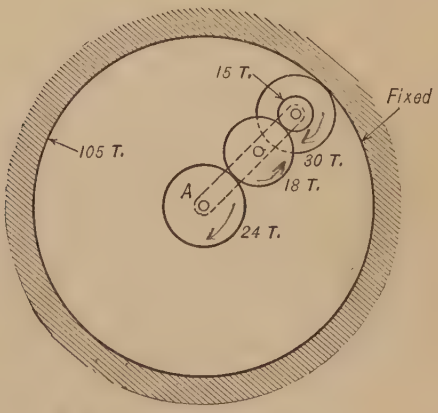

PROB. 78

79. If shaft A makes 20 turns in a positive direction, find the number of turns of shaft B and its direction.

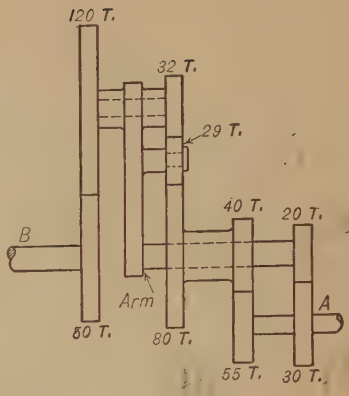

PROB. 79

80. D is a fixed gear, A is fast to the shaft with the 54-toothed gear, and P is the arm of the epicyclic train. If A turns -20 find the turns of the arm, then find the turns of B.

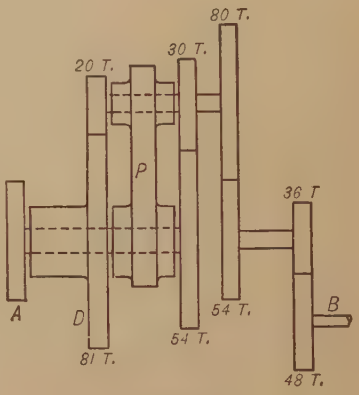

PROB. 80

81. In this hoisting mechanism, A is a fixed annular having 100 teeth. The two idle pinions B are carried by the arm of the epicyclic train, which also carries the drum, as shown. Gear C, which is fast to the crank, has 70 teeth. Diameter of drum is 5 ins., length of crank is 21 ins., force applied at crank is 75 lbs. Find the teeth on the pinions B and weight lifted, neglecting friction.

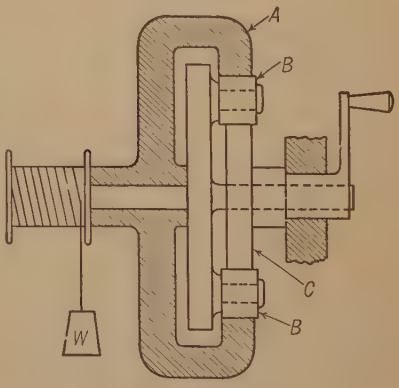

PROB. 81

82. For 36 turns of D, find how many turns of F and in which direction?

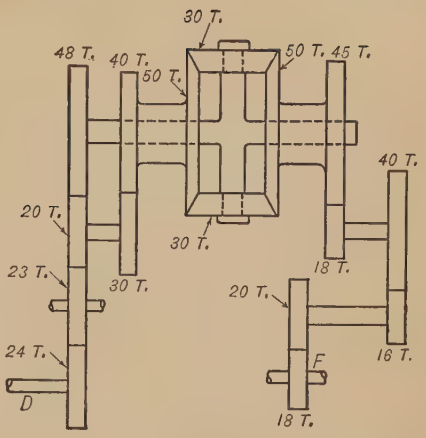

PROB. 82

83. For -3 turns of D, find how many of F and in which direction?

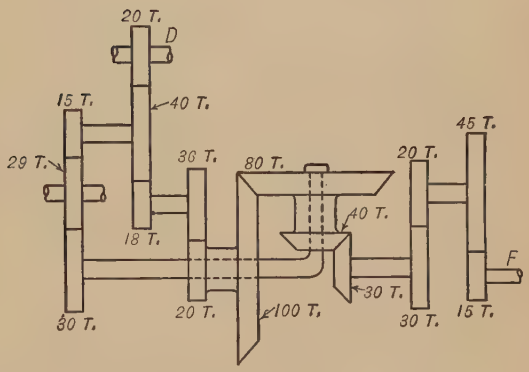

PROB. 83

84. In this train find the ratio of the diameters C and D, if 3 turns of A as shown are to cause the arm to turn 11 times. Must a crossed or an open belt be used if the arm turns as shown?

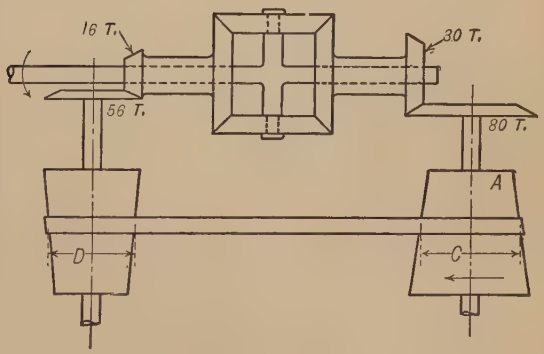

PROB. 84

85. Let shaft S turn $+3$ times. Find the turns of the arm.

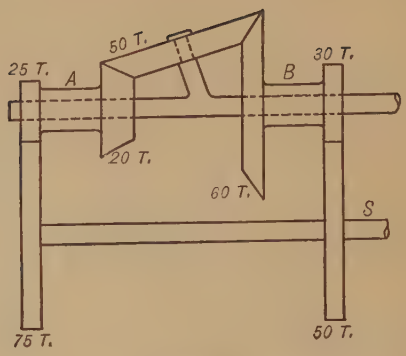

PROB. 85

86. If A is a shaft coupled to a dynamo making 2500 r.p.m., how many revolutions per minute does B make?

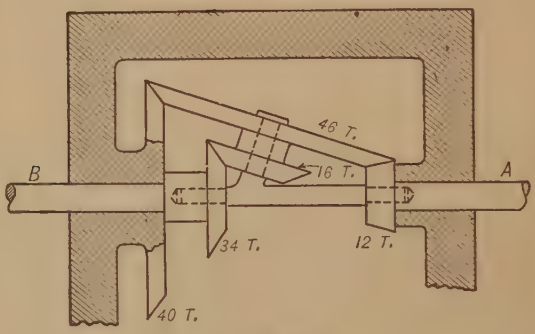

PROB. 86

87. The gear B is fixed. For 31 turns of A in direction shown, how many turns does C make and does it turn in the same direction as A or opposite?

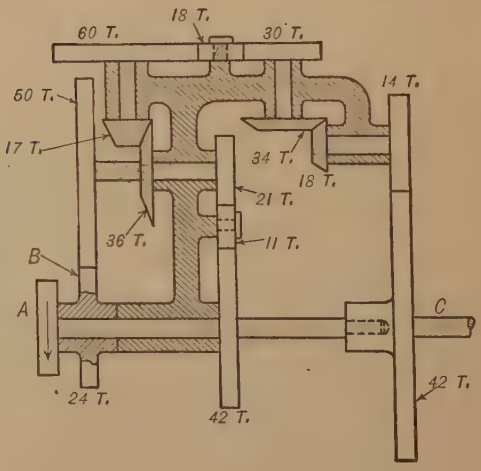

PROB. 87

88. In this epicyclic train let A turn $+6$, find the turns of B.

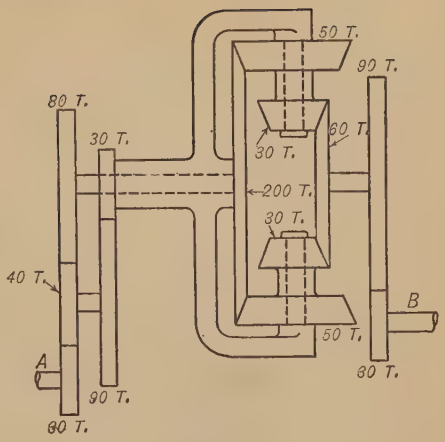

PROB. 88

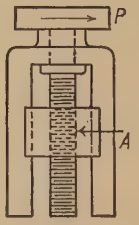

PROB. 89

89. The pulley P makes 40 r.p.m. in the direction shown. What must be the lead of the screw if nut A is to rise $3\frac{3}{4}$ ins. in 45 seconds? Is screw right handed or left handed?

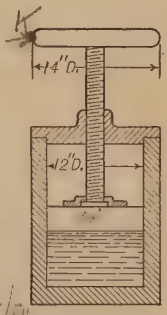

PROB. 90

90. What pressure in lbs. on the square inch is exerted on a liquid below the piston by a force of 40 lbs. at the rim of the hand-wheel? The screw has $\frac{1}{4}$-in. lead and is double threaded. Allow 20 per cent lost in friction.

91. Find lead in inches of the screw if a force of $1\frac{3}{4}$ tons is to be exerted at W by a pull of 75 pounds on the rope in the groove of the wheel D which has an effective diameter of $4\frac{1}{2}$ ft. (Allow 45 per cent friction loss.)

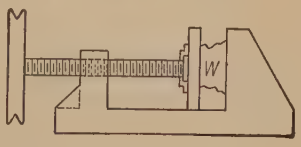

PROB. 91

92. If driving pulley, D, makes 300 r.p.m. at what rate is the cross rail raised?

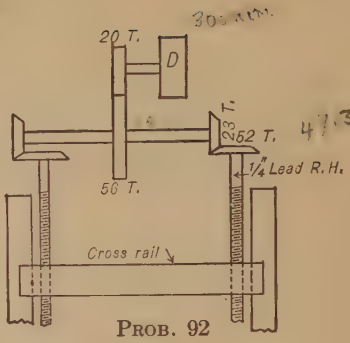

PROB. 92

93. B and C are two equal gears. They may have no axial motion. D and E are two gears, E being four times as large as D. Shaft A is a square shaft turning with B, but free to slide through it. The screw threaded through C has a lead of $\frac{1}{4}$ in. left handed. How many turns of the handle are needed and which way (front side of D going down or up) to move the screw 2 ins. to the right?

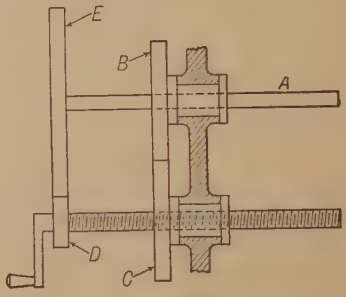

PROB. 93

94. 20 turns of F are to raise W $5\frac{1}{2}$ ins. $P_1 = 0.5$ ins. lead R.H. P_2 is right handed. What is the lead of P_2? Which way must F turn as seen from above (right handed or left handed)? (Two possible solutions.)

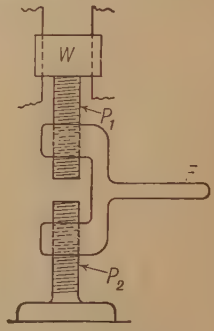

PROB. 94

95. Screw S has 10 threads per inch (single) right handed and is fixed. Nut A may slide but cannot turn. How many (single) threads per inch has screw S_1 if 46 turns of the hand-wheel in the direction shown lower A 0.66 ins.? Are threads on S_1 right handed or left handed? If the hand-wheel had a rim-radius of 7 ins. and S_1 had 8 threads per inch (single) right handed what force would be necessary at the rim to raise a weight (W) of 16,800 lbs.? Allow 60 per cent lost in friction.

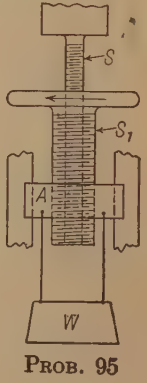

PROB. 95

96. The hub H of the 200-tooth gear forms the nut for the screw S. The graduated wheel is fast to the shaft with the two pinions. How far will S move along its axis when W is turned through the angle represented by one division? In which direction will S move if W turns with the arrow?

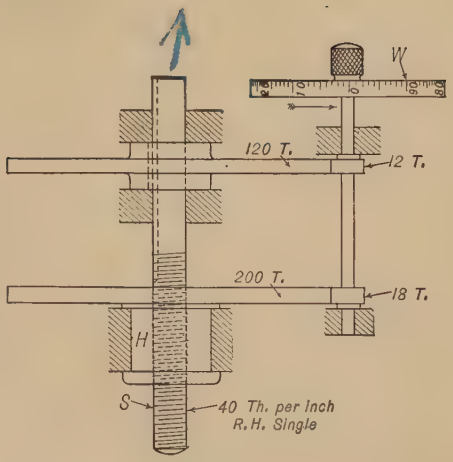

PROB. 96

97. If the mechanism of Prob. 96 were changed as shown in this figure, how far would S move and in which direction if W turns with the arrow, one division?

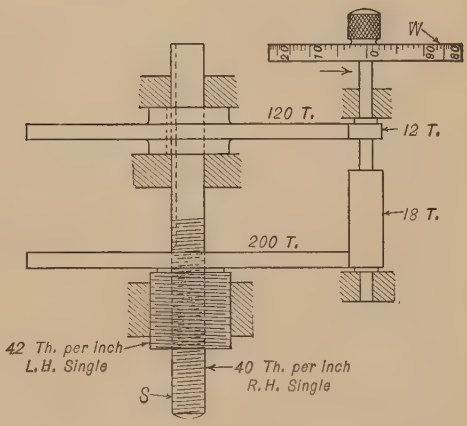

PROB. 97

98. In this differential screw, A and C are broad-faced pinions which are fast to each other and are turned by the crank shown. H is a fixed nut, E is a left handed screw having $\frac{1}{8}$ in. lead and F is a right handed screw having $\frac{3}{4}$ in. lead. How far does E move for 24 turns of the crank and in which direction relative to the crank rotation?

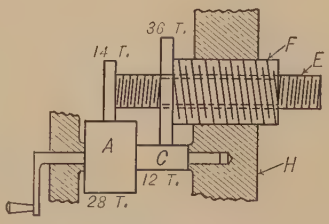

PROB. 98

99. In a screw cutting train (Figs. 240a, 240b), the lead screw has a lead of $\frac{1}{6}$ in. left handed. Gear A has 30 teeth, while gear B has 40 teeth. Find suitable numbers of teeth for the change gears C and D, using no gear of less than 16 teeth, if the

lathe is to cut threads from 4 to 20 per inch, also to cut $11\frac{1}{2}$ threads per inch. Arrange results in the form of a table, using the least number of gears and having as few teeth as possible. Give the number of different change gears that must be furnished with the lathe and also the total number of teeth that must be cut to make the set of change gears. Should N and M both be used in cutting a right handed thread, or only M?

100. In a worm and wheel let the worm be triple-threaded and the diameter of the drum be 14 ins. How many teeth must the wheel have if 30 turns of the worm are to move W 20 ins.? If $R = 16\frac{2}{3}$ ins., what must F be, if W equals 8800 lbs. actually lifted, 40 per cent being the loss due to friction? If the handle is "pushed" to raise the weight, is the worm right handed or left-handed? (Take $\pi = \frac{22}{7}$.)

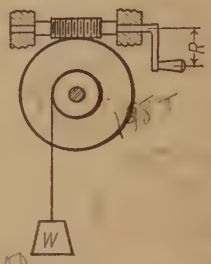

PROB. 100

101. Worm A is double-threaded and its worm wheel has 36 teeth. Worm B has a lead of $\frac{5}{8}$ in. The pitch diameter of the drum for the weight is one foot. The force, F, at the end of a 16-in. handle on B is 20 lbs. and W is 25,344 lbs. If 60 per cent is lost in friction what is the diameter of worm wheel C? (Take $\pi = \frac{22}{7}$.)

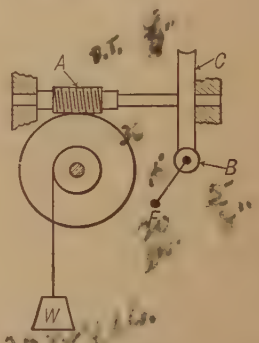

PROB. 101

102. F is a double-threaded right handed worm. A is a worm wheel having 32 teeth. On the same shaft with A is a gear C, 17-inch pitch diameter in mesh with gear D, 4-in. pitch diameter. On the shaft with D is the left-handed worm E having a lead of 2 ins., in mesh with worm wheel B, 10.83 ins. pitch diam. Disk H is fast to the shaft of worm F, and B is loose on this shaft.

1° How many turns of handle before H and B will be in the same position relative to one another?

2° What changes in these results would occur if worm E were right-handed instead of left-handed?

3° If a drum 20 ins. in diameter were attached to B and a weight of 2000 lbs. suspended from it, how large a force at the handle would be necessary to raise the weight? Neglect friction.

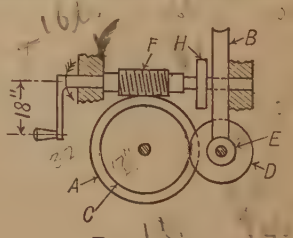

PROB. 102

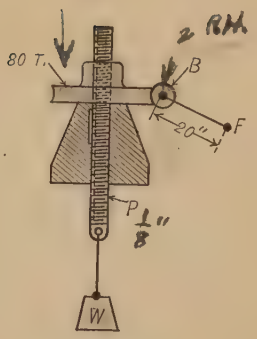

PROB. 103

103. P is threaded through the worm wheel but cannot turn. Lead of thread on P is $\frac{1}{8}$ in. right handed. Worm is double-threaded and right-handed. How many turns of B, and which way (right-handed or left-handed) to raise weight $\frac{1}{2}$ in.? What weight can be raised by a force of 50 lbs. applied at F? (30 per cent friction loss.)

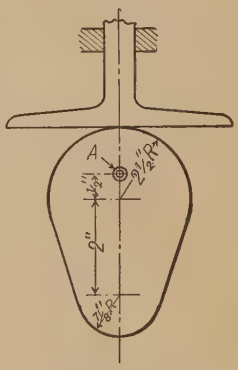

PROB. 104

104. This plate cam is made up of arcs of two circles and their common tangents and turns about the fixed center A. Plot a curve showing the motion of the follower for every 15 degrees movement of the cam for $\frac{1}{2}$ turn. Scale of plot is to be as follows: Abscissæ = angles turned by cam, $\frac{3}{8}$ in. = 15 degrees. Ordinates = full size displacements of the follower.

Make, on the same plot, a curve that would show the displacements of the follower, if its motion had been harmonic.

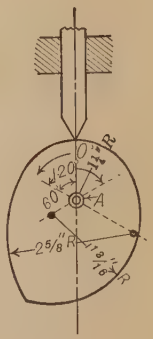

PROB. 105

105. The plate cam with axis at A consists of the arcs of three circles with centers and radii as shown. Cam turns uniformly left-handed. Draw a diagram which shall show the motion of the follower, ordinates to be distance moved by the follower (full size), and abscissæ to represent angular motion of the cam ($\frac{1}{4}$ in. = 30 degrees). Take points every 30 degrees with an extra point at 225 degrees.

106. Find the outline of a plate cam which, by turning about the center C as shown by the arrow, shall cause a point A to move along the path A–B at a uniform speed as follows: $\frac{6}{10}$ the distance A–B in $\frac{1}{4}$ turn of the cam. Still $\frac{1}{3}$ turn. Remaining part of the distance in $\frac{1}{6}$ turn. Return to A at once over the same path as previously traversed. Still $\frac{1}{4}$ turn. (Take 10 intervals in the distance A–B.) Cam to be full size.

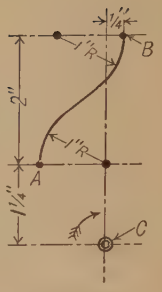

PROB. 106

107. Starting from the position shown, the slide is to drop 2 ins. with harmonic motion during $\frac{3}{8}$ of a turn, to rise at once 1 inch, to remain still $\frac{1}{8}$ of a turn, to drop 2 ins. with uniformly accelerated and uniformly retarded motion in $\frac{1}{2}$ turn, and then to rise 3 ins. at once. Find the cam outline if the end A of the lever is in contact with the cam, the latter to turn in the direction shown. (Assume that A is kept in contact with the cam by some external force.)

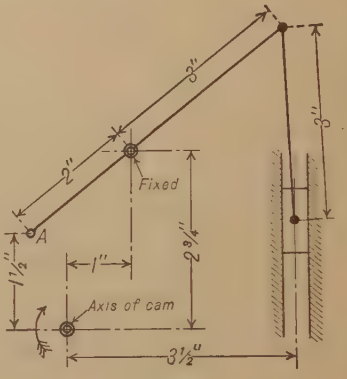

PROB. 107

108. Find the outline of a plate cam turning uniformly right-handed to give block A the following motion: remain still $\frac{1}{12}$ turn, rise 1 in. with harmonic motion in $\frac{1}{3}$ turn, still $\frac{1}{3}$ turn, drop $1\frac{3}{8}$ ins. at once, rise $\frac{3}{8}$ in. uniformly in $\frac{1}{4}$ turn. Cam is to drive roller B 1 in. in diameter.

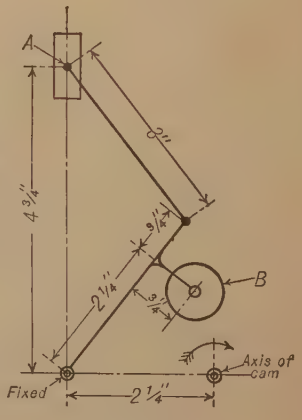

PROB. 108

109. Piece A carries a pin which projects into the slot on the horizontal piece B. Find outline of a plate cam turning uniformly right-handed to act at D and give A the following motion: Still for $\frac{1}{4}$ turn of cam; up $1\frac{1}{2}$ ins. with harmonic motion in $\frac{1}{4}$ turn; still $\frac{1}{4}$ turn, drop $1\frac{1}{2}$ ins. at once, and still $\frac{1}{4}$ turn.

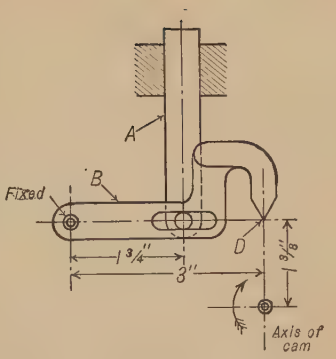

PROB. 109

110. A and B are two rollers ($\frac{3}{4}$-in. diameter) attached to the same frame. The rollers are in the same plane and both are always to be in contact with a single plate cam. Find the outline of the cam if the frame is to be raised 1 in. with harmonic motion in $\frac{1}{2}$ turn of the cam. What will be the motion of the follower during the remaining $\frac{1}{2}$ turn of cam?

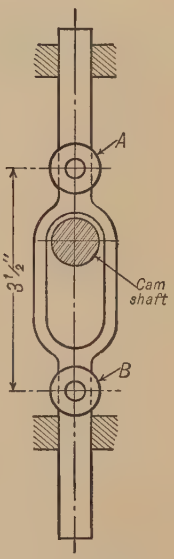

PROB. 110

111. Referring to Fig. 261, p. 211, a cam turning uniformly in a clockwise direction, on the axis E, is to give the following motion to the follower S, the lowest position of the flat surface of S being 2 ins. above E. Up 2 ins. with harmonic motion in $\frac{1}{4}$ turn of the cam, down 1 in. with harmonic motion in $\frac{1}{4}$ turn, still $\frac{1}{4}$ turn, down 1 in. with harmonic motion in $\frac{1}{4}$ turn. Find the shape of the cam.

112. Referring to Fig. 262, p. 212, the cam turns in a clockwise direction on axis C, the pivot P for the lever R is $2\frac{1}{2}$ ins. to the right and 3 ins. above C. The radius of the end of the slider S is $\frac{3}{4}$ in. The center line of the slide S is 3 ins. to the left of C and when in its lowest position, its lowest point is 2 ins. above C. "T" is 1 in., and a line parallel to the top surface of R and $\frac{1}{2}$ in. below it will pass through the pivot P. S moves up 3 ins. with uniformly accelerated and uniformly retarded motion in $\frac{1}{3}$ turn of the cam, still $\frac{1}{6}$ turn, down 3 ins. with uniformly accelerated and uniformly retarded motion in $\frac{1}{3}$ turn, still $\frac{1}{6}$ turn. Find the shape of the cam.

113. A cylindrical cam 3 ins. outside diameter (turning right handed as seen from the right) is to move a roller. Roller is above and moves parallel to the axis of the cam. Roller moves as follows: To right with harmonic motion $1\frac{1}{4}$ ins. in $\frac{1}{3}$ turn of cam. Still for $\frac{1}{6}$ turn. To left with harmonic motion $1\frac{1}{4}$ ins. in $\frac{1}{3}$ turn. Still for $\frac{1}{6}$ turn. The roller is to be $\frac{3}{4}$ in. in diameter at the large end and of such form as to give pure rolling contact. Groove in cam is to be $\frac{3}{4}$ in. deep. Draw development for both top and bottom of groove of the part of cam which causes the motion to take place.

114. A and D are fixed axes. $AB = 1$ in., $BC = 1\frac{3}{4}$ ins., $BH = 3\frac{1}{4}$ ins., $DC = 1\frac{1}{2}$ ins. Find the instantaneous axis of BCH. Assuming the velocity of B to be represented by a line $\frac{3}{4}$ in. long, find the linear velocity of the point H on the rod BCH.

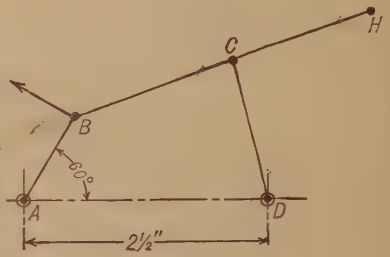

PROB. 114

115. A is a fixed axis. $AB = 1$ in., $BC = 2$ ins., $BH = 3$ ins. Assuming the velocity of B to be represented by a line 1 in. long, find velocity of C and of H.

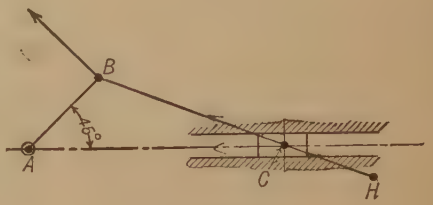

PROB. 115

116. A is a fixed axis. $AB = 1$ in., $BC = 2$ ins., $BH = 3$ ins., $HE = 2$ ins. Assuming velocity of $B = 1$ in., find velocity of E.

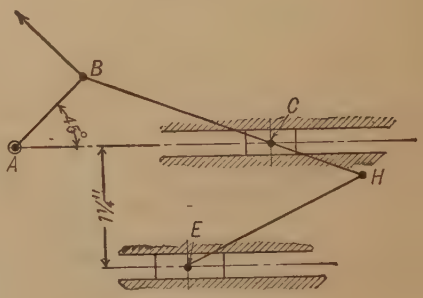

PROB. 116

117. A ladder 12 ft. long is leaning against a wall and makes an angle of 60 degrees with the pavement. The wall is perpendicular to the pavement. If the lower end of the ladder slips on the pavement at the rate of 1 ft. per second, find graphically the velocity of the top of the ladder, the velocity of a point 4 ft. from the lower end and the velocity of the point on the ladder which is moving the slowest at this time.

118. The velocity of A is represented by a line $1\frac{1}{2}$ ins. long; find velocity of block P if the wheel rolls without slipping.

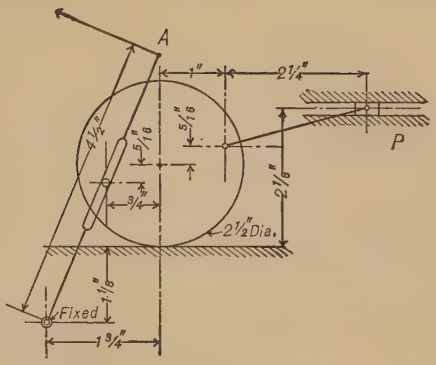

PROB. 118

119. The diagram represents the running gear of a locomotive. The driving wheels A, A are 6 ft. in diameter, while the trailing wheel B is 3 ft. in diameter. CD is 15 ins. and DE is 60 ins. The locomotive is moving forward with a velocity represented by a line 2 ins. long. Find graphically the absolute velocity of the crosshead E, and its velocity relative to the guides, also find the velocity of the top of the trailing wheel B.

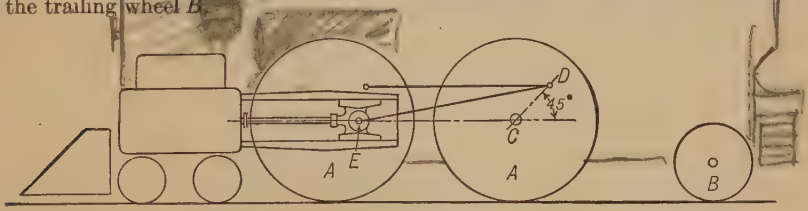

PROB. 119

120. Velocity of A is represented by a line $1\frac{1}{4}$ ins. long. Find graphically the velocity of B if B rolls without slipping on C. C and D turn together and D rolls without slipping on surface E.

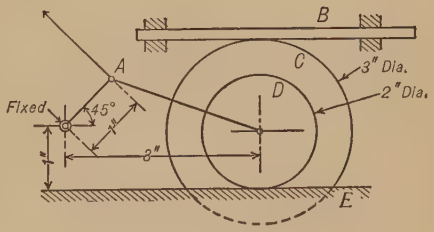

PROB. 120

121. A is a disk 2 ins. in diameter and B is a disk $1\frac{3}{8}$ ins. in diameter, both turning on fixed axes. A drives B with no slipping. C is a fixed axis. $ED = 3\frac{3}{8}$ ins., $CD = 1\frac{1}{4}$ ins., $DX = 1\frac{3}{4}$ ins., $FX = 3$ ins. If the surface speed of A is 1 in., find the velocity of X.

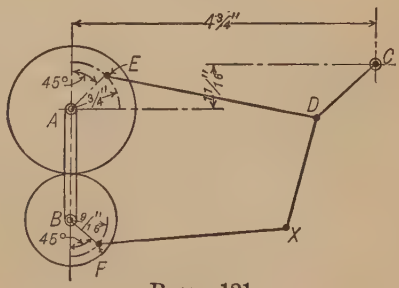

PROB. 121

122. K, G, and H are fixed axes. The wheel is 2 ins. in diameter and rolls on track T without slipping. $KM = 2\frac{3}{16}$ ins., $KA = 1\frac{5}{16}$ ins., $BD = 1\frac{1}{8}$ ins., $GF = 1$ in., $HE = \frac{7}{8}$ in., $DC = 3\frac{1}{2}$ ins., $DF = 2\frac{3}{4}$ ins., $DE = 1\frac{13}{16}$ ins. If the velocity of A is $\frac{1}{2}$ in., find velocity of C.

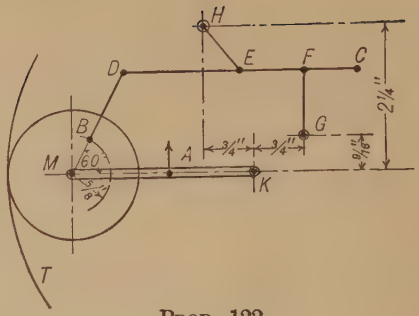

PROB. 122

123. Assuming no slip between the cylindrical disks, and a surface velocity of 50 ft. per minute, find the velocity of the slide in ft. per minute.

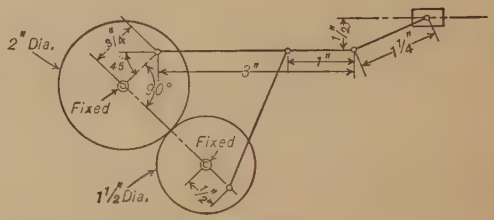

PROB. 123

124. Assuming no slip between the disks, and a surface velocity of disk $A = 1$ in., find the velocity of the center of disk X.

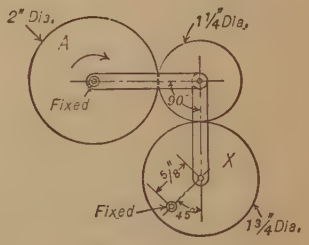

PROB. 124

125. A, B and C are fixed centers. Velocity of block P is represented by a line $1\frac{1}{4}$ ins. long. Find velocity of P'.

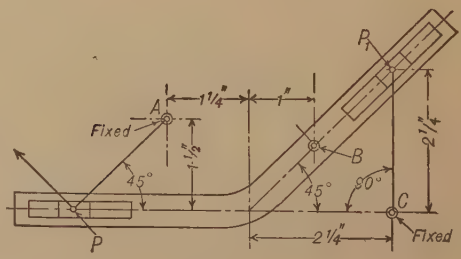

PROB. 125

126. If the velocity of the circumference of A = 1 in. find the velocity of X.

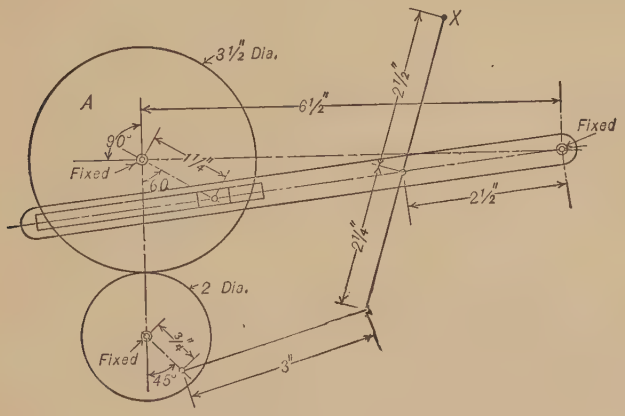

PROB. 126

127. D and E are fixed axes. $DA = 3\frac{1}{2}$ ins., $DF = 1\frac{5}{8}$ ins., $EC = 2\frac{3}{4}$ ins., $EG = 1\frac{9}{16}$ ins., $GB = 3$ ins., $FB = 2$ ins. If the velocity of A is 2 ins., find velocity of B.

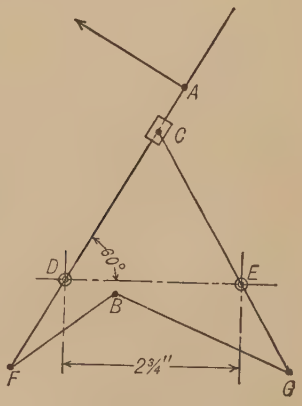

PROB. 127

128. Given velocities of A and B represented by lines $\frac{3}{4}$ and $1\frac{1}{4}$ ins. long respectively. Find the velocity of S.

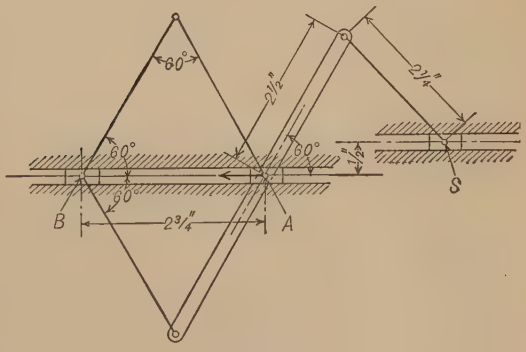

PROB. 128

129. Given the velocity of A represented by a line 1 in. long, find the velocity of B.

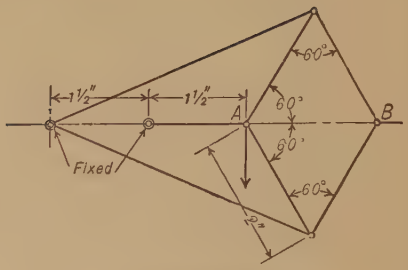

PROB. 129

130. A 2-pitch pinion of 14 teeth is turning clockwise at the rate of 50 r.p.m. and is driving a rack. The tooth of the rack is a straight line making an angle of 22½ degrees with the line of centers and the addendum of the pinion is equal to the module. Find by graphical method the rate of sliding between the teeth at the pitch point and at the end of recess. Give results in inches per minute, assuming $\pi = 3$. Scale, one inch equals 300 ins. per minute.

131. In this linkage let $BC = AB = CD = 1\frac{1}{2}$ ins., and $AD = 2\frac{3}{4}$ ins. Find the centrode of BC between the positions B_1C_1 and B_2C_2 and then find the centrode of AD if BC is fixed.

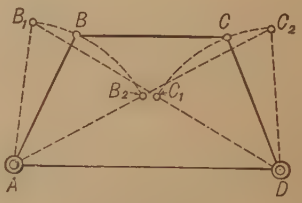

PROB. 131

132. AD (fixed) = 10 ins., $BC = 10\frac{1}{2}$ ins., $DC = 4\frac{1}{2}$ ins. The sketch shows a linkage used in the feed mechanism of a vertical boring mill. The crank AB is adjustable for varying throws. Determine the angular motion of DC when AB is $2\frac{1}{2}$ ins. (this being the setting for maximum feed).

PROB. 132

133. Plot a curve showing ratio $\frac{\text{angular speed } CD}{\text{angular speed } AB}$ for 30-degree intervals of AB, starting with AB in position AB_1 and turning uniformly left-handed.

Ordinates = angular speed ratio (1 in. = unity).

Abscissæ = angular positions of AB ($\frac{1}{4}$ in. = 30 degrees).

$AC = \frac{3}{4}$ in., $DC = 1\frac{1}{2}$ ins., $DB = 2\frac{1}{4}$ ins., $AB = 2$ ins.

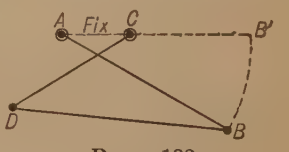

PROB. 133

134. $AC = BD = 8$ ins., $AB = CD = 3$ ins. If AB is turning uniformly 25 r.p.m. calculate the maximum angular speed of CD in radians per minute. Sketch the linkage in the position at which the maximum angular speed of CD exists.

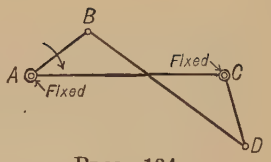

PROB. 134

135. A gas engine has a stroke of 5 ins. and a connecting rod 10 ins. long. Calculate, and check by graphical construction, the speed at which the piston is moving when it is at mid-stroke, if the engine is turning 1100 r.p.m. Calculate the acceleration of the piston when the crank is at a dead point.

136. Disks M and N turn about their respective centers, C and B, within the frame K. Rod L slides in the block at C which is fixed to disk M. The center line of the block coincides with a diameter of M. What is the value of ratio $\frac{\text{angular speed disk } M}{\text{angular speed disk } N}$ in the position shown?

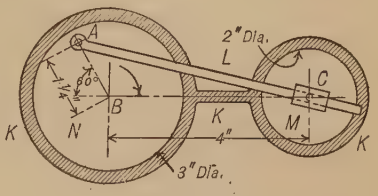

PROB. 136

137. A swinging-block quick return motion has a ratio $\frac{\text{time of cutting stroke}}{\text{time of return stroke}} = \frac{2}{1}$.

If the driving crank is 1 in. long, locate the fixed point of the swinging link. Draw the linkage in some convenient position, draw the infinite links which have been replaced by the sliding pair, state the ratio $\frac{\text{angular speed driven crank}}{\text{angular speed driving crank}}$ for this position (numerical values not required). State maximum (numerical) value of this ratio.

138. In the swinging block mechanism, Fig. 335, let the maximum value of $BA = 8$ ins. and the minimum value $= 3$ ins.; the arm $CN = 3$ ft.; $NP = 2$ ft. 2 ins.; path of P is perpendicular to CB and 19 ins. above B; maximum value of $\frac{\text{time of cutting stroke}}{\text{time of return stroke}} = \frac{2}{1}$; angular speed of gear $M = 30$ r.p.m.

1° Find position of axis C.

2° Find minimum value of $\frac{\text{time of cutting stroke}}{\text{time of return stroke}}$.

3° Plot a curve whose abscissæ are time units and whose ordinates are linear speeds of P in feet per minute. Scale of abscissæ $\frac{1}{4}$ in. = time occupied by gear M in turning through an angle of 15 degrees. Scale of ordinates 1 in. = 100 ft. per minute.

139. In a Whitworth Quick Return mechanism similar to Fig. 340, $BA = 5\frac{1}{2}$ ins. $BC = 12\frac{1}{4}$ ins. Assume that R is on a perpendicular to AB passing through A instead of above it, as shown in the figure.

1° Find the ratio of time of cutting stroke to time of return stroke.

2° Let $AN = 15$ inches; $NR = 4$ feet; angular speed of large gear $= 1$ radian per unit of time. Find the maximum linear speed of R in feet per unit of time.

3° If the path of R is 20 ins. above A, other dimensions remaining the same as before, what difference results in ratio of time of cutting stroke to time of return stroke?

140. Draw a pantograph to connect two points A and B, $1\frac{1}{2}$ ins. apart, so that the motion of A shall be to the motion of B as 13 is to 7. Calculate the distance from B to the fixed point. The pantograph is to be so arranged that A may move at least 5 ins. in either direction along the line through A and B.

141. Design a pantograph to reduce the motion of the crosshead of an engine that has a stroke of 12 ins., to 3 ins., so that a steam engine indicator may be operated from it. Let the distance from the fixed point to the point of connection at the crosshead be 15 ins. Draw half size.

142. The three points A, B, and C are to be connected by a pantograph so that A may move up 4 ins., B up 3 ins., and C down 2 ins. $AC = 6$ ins. Locate the fixed point and the point B, and then draw a pantograph that will allow A to be moved 4 ins. in every direction.

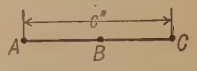

PROB. 142

143. P is to have a stroke of 3 ins. and is to lie on the same vertical line in its mid-position (shown in sketch) and its two extreme positions. Locate D and draw in the linkage. Then by producing AB and adding only two links, design a pantograph which shall contain a point whose motion is parallel to that of P and equal to $\frac{2}{3}$ of it. Draw in the pantograph and designate the point clearly.

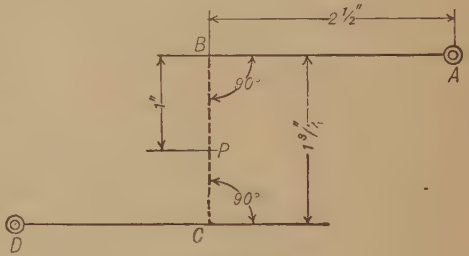

PROB. 143

144. Stroke of $P = 2$ inches in the vertical straight line, locate the points C and B giving the link BC and the moving point P. Then connect this point with a point R, 2 ins. horizontally to the right of P, by a pantograph so that

$$\frac{\text{motion of } R}{\text{motion of } P} = \frac{3}{2}$$

and calculate the distance from R to the fixed point of the pantograph.

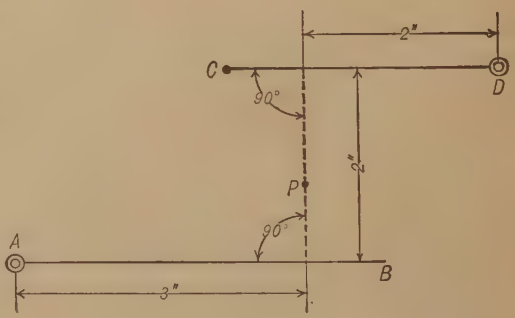

PROB. 144

145. Referring to Fig. 374, the stroke of e is $\frac{7}{8}$ of an inch downward from the position shown. A pencil at f draws a line along ss 4 ins. long, the highest position of f being 2 ins. above line ca. ss is parallel to and $4\frac{1}{2}$ ins. to the right of tt. ca is perpendicular to tt and $1\frac{1}{2}$ ins. above highest position of c. Link ab is $1\frac{3}{4}$ ins. long. Link dc swings equal angles either side of a line through d parallel to tt. Locate d, find length of fc, dc, bc and he; locate a and h. Solve by calculation or graphically, as is more convenient. Draw and dimension the mechanism.

146. Find W if there is a friction loss of 40 per cent.

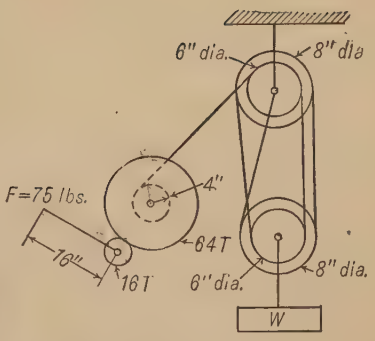

PROB. 146

147. In this hitch, what force F is required to raise a weight W of 1400 lbs., friction being neglected?

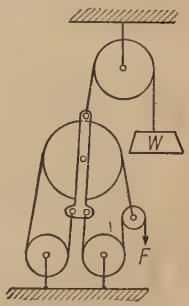

PROB. 147

148. If W = 3000 lbs., find the force F

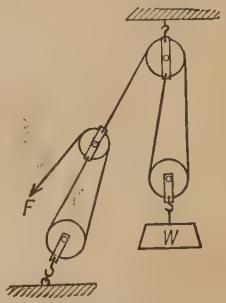

PROB. 148

149. Two men, weighing 150 lbs. each, stand on W and pull just enough to sustain the load.

(*a*) What pull do they exert on the rope?

(*b*) What is the tension on the support for the upper block, neglecting the weight of the blocks and rope itself?

(*c*) If the men stood on the ground what would be the tension in the rope which supports the upper block?

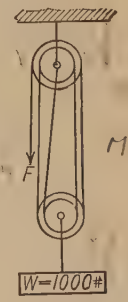

PROB. 149

150. A differential pulley-block is to lift 1500 lbs. with a pull of 30 lbs., friction being neglected. Find the ratio of the larger diameter of the upper sheave to the smaller one.

151. In a differential pulley-block, the smaller diameter of the upper sheave is 12 ins. It is found necessary to haul over 7 ft. of chain to raise the weight 6 ins. What is the other diameter of the upper sheave? Neglecting friction, what weight would be raised by a pull of 40 lbs.

152. With a differential pulley-block, if the diameters of the sheaves in the fixed block are 12 ins. and 11 ins., and if the weight of the lower block is 20 lbs., what net weight can be raised by a pull of 120 lbs. on the chain, allowing a loss of 30 per cent in friction? How much chain must be overhauled to lift the weight one foot?

TEST

Prob. 78; Formulae for
11. 149. Gears

Know leads
Definitions

Four bar linkage etc.

Fig. 242

INDEX

Acceleration, angular, 6.
  linear, 5.
  normal, 6.
  tangential, 6.
Acting flank, 94.
Action, angle of, 96.
  arc of, 96.
Addendum, 94.
  circle, 94.
  limits of, on involute gears, 112.
Aggregate combinations, 306.
  motion by linkwork, 306.
Anchor escapement, 331.
Angle of action, 96.
  of approach, 96.
  of recess, 96.
  pressure, 97.
Angular acceleration, 6.
Angular speed, 5.
Annular gear, 86.
  involute, 117.
  cycloidal, 128.
Approach, angle of, 96.
  arc of, 96.
Arc of action, 96.
  of approach, 96.
  of recess, 96.
Automobile differential, 173, 177.
  transmission, 160, 172.
Axial pitch, 149.
Axis, instantaneous, 228.

Backlash, 95.
Bands, 3.
Barrel, 54.
Bearings, 10.
Bell crank lever, 16.
Belt, approximate length of, 28.
  calculation of power, 25.
  connecting non-parallel shafts, 37.
  crossed, 23.
  double, 24.
Belt drives, examples of, 40–49.
  exact length of, 29.
  open, 23.
  quarter-turn, 38.
  single, 24.
  tension in, 25.
Belting, power of, 24.
Belts, 21–50.
  kinds of, 23.
Bevel epicyclic train, 176–179.
Bevel gears, 86, 144–148.
  twisted, 86.
Block chains, 57.
Bush, 10.

Cam and slotted sliding bar, 327.
Cam, cylindrical, 197, 213–219.
  definition of, 197.
  diagram, 198–200.
  plate, 197, 200–212.
  plate, with flat follower, 210–212.
  positive motion plate, 209.
Cams, combination of, 219–220.
Centrode, 229.
  of a rolling body, 229.
Chain, kinematic, 244.
Chains, 21, 55–62.
  block, 57.
  calculation for length of, 59.
  conveyor, 55.
  hoisting, 55.
  Morse rocker-joint, 62.
  power transmision, 57
  Renold, 60.
  roller, 59.
  silent, 60.
Chronometer escapement, 334.
Chuck, elliptic, 283.
Circular pitch, 95.
Clearance, 94.
Clearing curve, 104.
Click, 311.

Clockwork, 157.
Closed pair, 9.
Collar, 11.
Combination, elementary, 1.
Components, 225.
Composition of velocities, 226.
Compound screws, 188.
Cones, rolling without slip, 67–72.
Conic four-bar linkage, 286.
Conjugate curves, 99.
  construction of, 99.
Connecting rod, 221.
Contact, path of, 97.
  pure rolling, 63.
Continuous motion, 4.
Conveyor chains, 55.
Cords, 21, 50.
  small, 53.
Cotton card train, 161.
Counter mechanism, 322, 325.
Coupling, Oldham's, 284.
Crank, 16, 221.
  and rocker, 250.
  pin, 221.
Crown gears, 86, 147.
Crown-wheel escapement, 330.
Crowning of pulleys, 49.
Cycloidal gears, 122–138.
  low numbered teeth, 135.
Cylinder and sphere, rolling, 73.
Cylindrical cam, 197, 213–219.
  multiple turn, 215–218.
Cylinders, rolling without slip, 63–66.

Dead-beat escapement, 332.
Dead points, 249.
Diametral pitch, 95.
Differential, automobile, 173, 177.
Differential screws, 188.
Direction, 3.
Disk and roller, 74.
Drag link, 252.
Driven wheel, 153.
Driver, 2.
Driving wheel, 153.
Drum, 54.

Eccentric, 275.
  rod, 275.
Eccentricity, 275.
Effective lever arms, 20.
Effective pull, 25.
Elementary combination, 1.
Elements, expansion of, 274.
  pairs of, 8.
Ellipses, rolling, 81, 82.
Elliptic chuck, 283.
  trammel, 281.
Engine, oscillating, 270.
Epicyclic train, 166–179.
Epitrochoid, 104.
Escapement, 311.
  anchor, 331.
  chronometer, 334.
  crown-wheel, 330.
  dead-beat, 332.
  Graham cylinder, 333.
Escapements, 330.
Expansion of elements, 274.

Face, of gear, 94.
  of tooth, 94.
  width of, 94.
Feather, 11.
Ferguson's paradox, 171.
Flank, acting, 94.
  of tooth, 94.
Flexible connectors, 21.
Follower, 2.
Foot-pound, 24.
Four-bar linkage, 221–245.
  angular speed ratio, 246.
  diagrams for change in speed ratio, 248.
  non-parallel crank, 254.
  parallel crank, 254.
  relative motion of links, 246.
  sliding slot, 273.
  swinging block, 267.
  turning block, 271.
Frame, 2.
Frequency of contact, 156.
Friction catch, 318.
Friction gearing, 74–76.
  grooved, 76.

Gear teeth, involute, 106–122.
  law governing, 98.
  rate of sliding of, 241.
Gear train design, 162–165.

Gears, annular, 86.
automobile differential, 173, 177.
bevel, 144–148.
classified, 86.
crown, 86, 147.
cycloidal, 122–138.
cycloidal, low numbers of teeth, 135.
drives, 86.
epicyclic, 166–179.
face of, 94.
helical, 86, 149–152.
helical, speed ratio, 152.
herringbone, 86, 139.
hyperboloidal, 86.
interchangeable, 119.
involute, standard proportions of, 122.
mitre, 86.
pin, 139–143.
reduction, 162.
screw, 148.
separation of, 119.
skew, 86.
skew bevel, 147.
sliding eliminated, 139.
stepped, 138.
twisted, 138.
twisted bevel, 147.
Geneva stop, 325.
Graham cylinder escapement, 333.
Gudgeon, 10.
Guide pulleys, 40.
Guides, 10.

Harmonic motion, 7.
Helical gears, 86, 149–152.
speed ratio, 152.
Helix, the, 148.
Herringbone gears, 86, 139.
Higher pair, 9.
Hookes' joint, 287–290.
Horsepower, 24.
Horsepower of belt, calculation of, 25.
Hoisting chains, 55.
Hoisting machine train, 162.
Hunting cog, 156.
Hyperbolas, rolling of, 83.
Hyperboloidal gears, 86.

Idle wheel, 154.
Inclined plane, 180, 181.
Instantaneous axis, 228.
of a rolling body, 229.
Instantaneous center, 229.
Interchangeable, involute gears, 119.
Intermittent motion, 4.
from continuous motion, 324.
from reciprocating motion, 311.
Inversion of pairs, 10.
Involute, applied to gear teeth, 106.
Involute gears, separation of, 119.
Involute, of a circle, 105.
Isosceles linkage, 278–284.

Journal, 10.

Keys, 11,
Keyway, 11.
Kinematic chain, 244.

Lead, 149.
Lever, double rocking, 254.
nipping, 319.
Lever arms, effective, 20.
Levers, 16–20.
bell crank, 16.
kind of, 16.
motion from, 17.
Line of centers, 221.
Line of connection, 22.
Linear acceleration, 5.
speed, 4.
Link, 3, 222, 244.
Linkage, 244.
angular speed ratio, 246.
conic, 286.
four-bar, 221, 245.
isosceles, 278–284.
relative motion of links, 246.
sliding block, 259.
sliding slot, 273.
turning block, 271.
Links, relative motion of, 224.
Linkwork, slow motion by, 257.
Linkwork with a sliding pair, 258.
Locking devices, 328.
Logarithmic spirals, rolling, 78–81.
Lower pair, 9.

Machine, 1.
Mashed wheels, 321.

Mechanism, 1.
  constructive, 2.
  pure, 2.
Mitre gears, 86.
Module, 95.
Morse rocker-joint chain, 62.
Motion, 3.
  continuous, 4.
  cycle of, 4.
  from levers, 17.
  graphical representation of, 224.
  harmonic, 7.
  intermittent, 4.
  kinds of, 7.
  modification of, 8.
  parallelogram of, 225.
  parallelopiped of, 226.
  period of, 4.
  reciprocating, 4.
  resultant, 225.
Multiple turn cylindrical cam, 215–218.

Neck, 10.
Nipping lever, 319.
Non-cylindrical surfaces, rolling of, 77–85.
Normal acceleration, 6.
Normal pitch, 109, 149.
  relation to circular pitch, 110.
Nut, 10.

Obliquity of action, 97.
Oldham's coupling, 284.
Oscillating engine, 270.
Oscillation, 4.

Pairs, lower, 9.
  higher, 9.
  incomplete, 9.
  inversion of, 10.
  of elements, 8.
Pantograph, 298.
Parabolas, rolling, 83.
Parallel motion by cords, 305.
  by means of four-bar linkage, 303.
Parallelogram of motion, 225.
Parallelopiped of motion, 226.
Path, 3.
Path of contact, 97.

Pawl, 312.
  double acting, 315.
  reversible, 313.
Peaucellier's straight line mechanism, 291.
Pedestal, 10.
Periphery-speed, 14.
Pillow-block, 10.
Pin gears, 139–143.
Pitch, axial, 149.
  circles, 94.
  circular, 95.
  diametral, 95.
  normal, 109, 149.
  number, 95.
  point, 94.
  surface, 22.
Pivot, 10.
Plane, inclined, 180, 181.
Planer drive, 158.
Plate cam, 197, 200–212.
  with flat follower, 210.
Plumber-block, 10.
Positive motion plate cam, 209.
Power transmission chains, 57.
Power, unit of, 24.
Pressure angle, 97
Pulley, 21.
Pulley-block, triplex, 175.
  Weston differential, 310.
Pulley-blocks, 307.
Pulleys, crowning of, 49.
  guide, 40.
  stepped, 30
  stepped, equal, 34.
  tight and loose, 50.

Quarter-turn belt, 38.
Quick return, swinging block, 267–270.
  Whitworth, 271.

Rack and pinion, 86.
  involute, 116.
Radian, 12.
Ratchet wheel, 311.
Recess, angle of, 96.
  arc of, 96.
Reciprocating motion, 4.
Reduction gear, 162.
Renold silent chain, 60.

Resolution and composition of velocities, typical problems, 230–243.
Resolution of velocities, 226.
Resultant, 225.
Resultant motion, 225.
Revolution, 4.
Revolving bodies, 12.
  angular speed of, 12.
  linear speed of, 12.
Robert's straight-line mechanism, 302.
Rocker, 16.
Roller chains, 59.
Rolling bodies, velocities of point on, 230.
Rolling contact, pure, 63.
Root, circles, 94.
  distance, 94.
Rope driving, 51–55.
  systems of, 51.
  grooves for, 53.
Ropes and cords, 50.
Ropes, wire, 54.
  wire, grooves for, 55.
Rotation, 4.
  axis of, 4.
  direction of, 4.
  plane of, 4.

Scott Russell, straight-line mechanism, 292–294.
Screw, 10.
  cutting, 190–193.
  gears, 148.
  rotation caused by axial pressure, 190.
  threads, 181.
Screws, differential, 188.
  speed ratio, 187.
Shafts connected by belt, directional relation, 22.
  speed ratio, 22.
Silent chains, 60.
Silent feed, 320.
Skew bevel, 147.
  gears, 86.
Slides, 10.
Sliding-block linkage, 259–266.
Sliding slot linkage, 273.
Speed, angular, 5.
  cones, 36.
  linear, 4.
  periphery, 14.
Speed, relation between forces and, 15.
  surface, 14.
  uniform, 5.
  variable, 5.
Spindle, 10.
Spline, 11.
Sprockets, diameters of, 60.
Spur gears, 86.
  twisted, 86.
Star wheel, 327.
Step, 10.
Stepped pulleys, 30.
  for crowned belt, 31.
  for open belt, 33.
Stepped wheels, 138.
Straight-line mechanism, 291.
  Peaucellier's, 291.
  Robert's, 302.
  Scott Russell, 292–294.
  Tchebicheff's, 303.
  Watt's, 295–298.
Sun and planet wheel, 170.
Surface speed, 14.
Swash-plate, 285.
Swinging-block linkage, 267.

Tangential acceleration, 6.
Tchebicheff's straight line mechanism, 303.
Threads, left-hand, 186.
  per inch, 186.
  right-hand, 186.
  screw, 181–187.
Tight and loose pulleys, 50.
Train, automobile transmission, 160.
  bevel epicyclic, 176–179.
  cotton card, 161.
  design of, 162–165.
  epicyclic, 166–179.
  hoisting, 162.
  value, 154.
Trains of wheels, 153.
Trammel, elliptic, 281.
Turn, 4, 12.
Turning block linkage, 271.
Transmission, automobile, 160, 172.
  modes of, 2.
Triple pulley block, 175.
Twisted bevel gears, 86, 147.

Definition

Twisted spur gears, 138.
Uniform speed, 5.
Universal joint, 288.

Velocities, composition and resolution of, 226.
graphical representation of, 224.
of rigidly connected points, 226.
typical problems, 230–243.
Velocity, 5.
Vibration, 4.

Watt's straight-line mechanism, 295–298.
Wedge, 180–181.
Whitworth quick return, 271.
Wiper, 197.
Wire ropes, 54.
Worm and wheel, 86, 193–196.

$\frac{N+2}{P}$ = outside diam $\frac{N}{P}$ = Pitch Diam.

$\frac{N}{2P}$ = Pitch radius.

To determine Pitch Diam. of Helical Gear,

$\frac{N}{\text{Normal Pitch} \times \cos \theta}$ where θ = helix angle

Gear Formulae

P = diametral pitch
P' = circular pitch
N = number of teeth
N_G = # teeth in large wheel
N_p = # teeth in small wheel
D = pitch diameter
C = center distance
S = addendum
F = clearance
W = total depth of tooth
T = thickness of tooth (arc along pitch circle)
O = outside or overall diameter

To Find	Formulae
Diametral pitch	$P = \frac{3.1416}{P'} = \frac{N}{D}$
Circular pitch	$P' = \frac{3.1416}{P} = \frac{\pi D}{N}$
Pitch diameter	$D = \frac{N}{P} = \frac{NP'}{3.1416}$
Center distance	$C = \frac{(N_g + N_p)P'}{2\pi}$ or $\frac{N_g + N_p}{2P}$
Addendum	$S = \frac{1}{P}$ or $\frac{P'}{\pi}$
Clearance	F $\frac{0.157}{P}$ or $\frac{P'}{20}$
Whole depth	$W = \frac{2.157}{P}$ or $.6866P'$
Thickness of tooth	$T = \frac{1.5708}{P}$ or $\frac{P'}{2}$
Outside diameter	$O = \frac{N+2}{P}$ or $\frac{(N+2)P'}{\pi}$
Number of teeth	$N = PD = \frac{\pi D}{P'}$
Length of rack	$L = \frac{\pi N}{P} = NP'$

Internal Gearing

Center Dist.	$C = \frac{N_g - N_p}{P}$ or $\frac{(N_g - N_p)P'}{2\pi}$
Inside diam.	$I = \frac{N-2}{P}$ or $\frac{(N-2)P'}{\pi}$
Pitch diam.	$D = I + 2S$ or $I - 2S$

IP IP

IPoly.

Given arc, to find radius

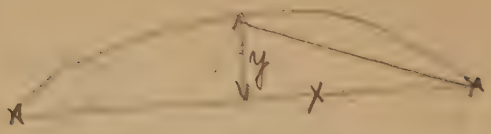

$y : x = x : z$

$z + y$

Presbrey Engine

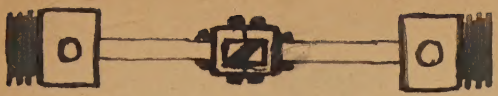

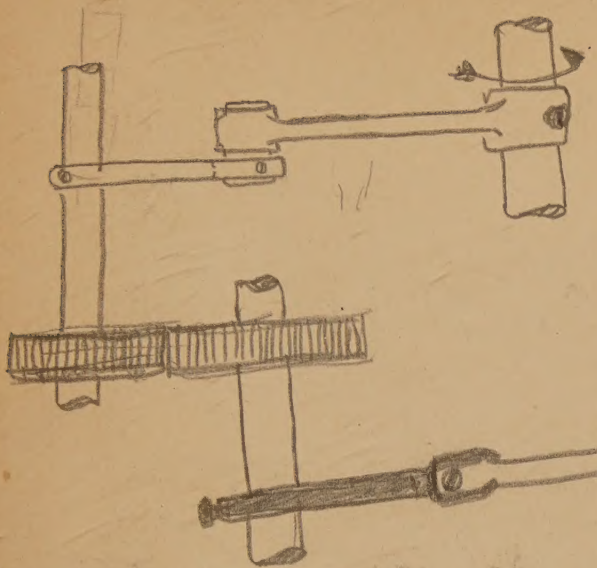

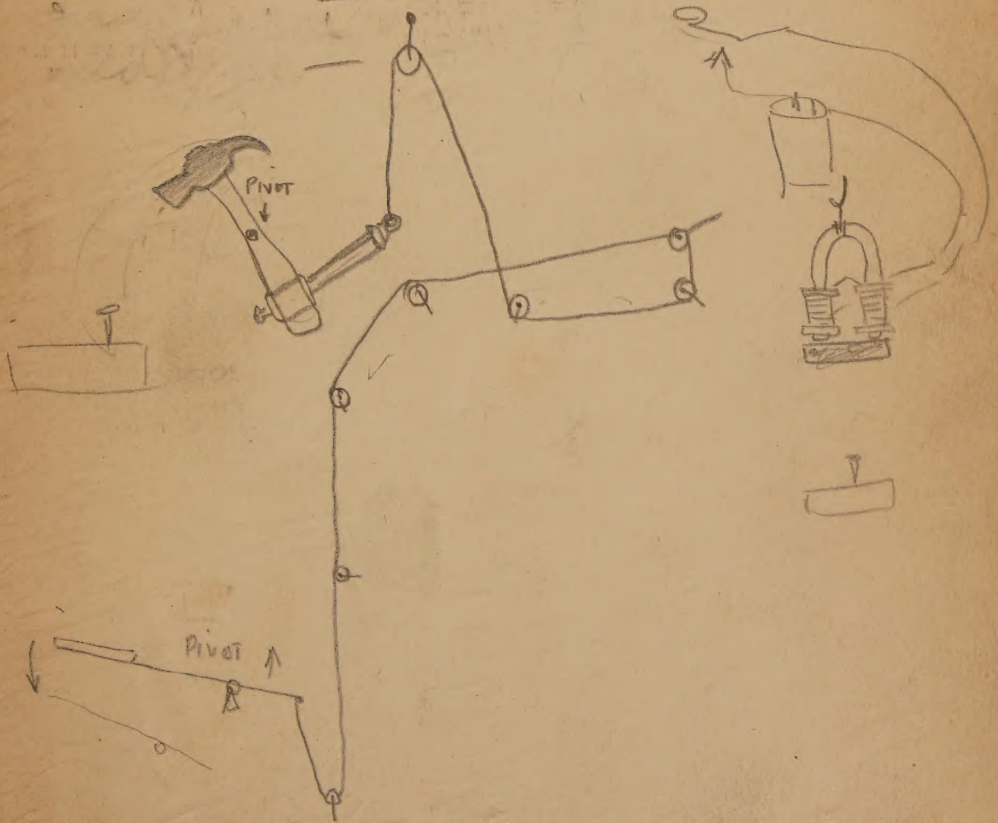

George W. Rocklein Jr.

"Oncet again"

30 degrees

Radee Ann

Gpicycloideeal

Univershial

Spring Fever!

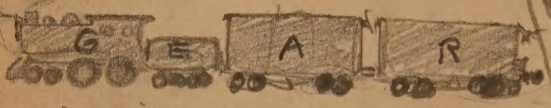

A TRAIN OF GEARS OUT FOR A RIDE!

OH, HELL! — HOMEWORK OVER EASTER!

~~#79~~	~~Pg. 348~~
~~89~~	~~351~~
~~90~~	~~351~~
92	352
~~95~~	352
96	353
100	354
101	354
102	354
~~103~~	355
~~105~~	355
106	356
112	357
147	365
149	365

unphuil + scale

Keck - library -

EASTER

Hell — Back again — O.K., th

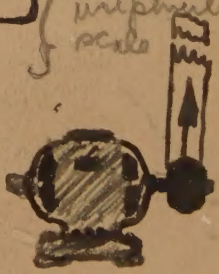

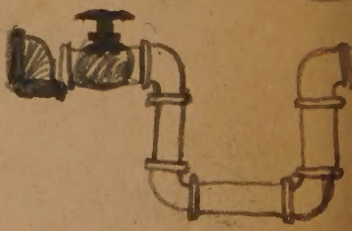

upto + incl. pg. 70.
Gear Formulae

26000?
WOW!

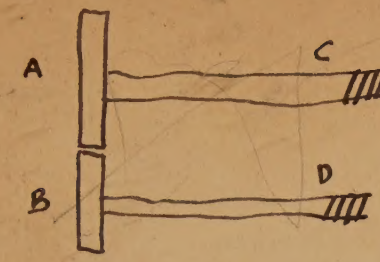

$\frac{A}{B} = \frac{C}{D}$

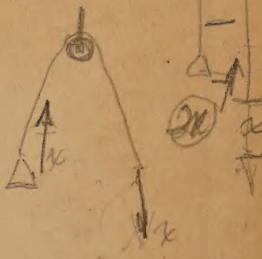

POLY

Belting —

°H.P. single belt = $\frac{\text{Vel. ft. P.M.} \times 43 \times \text{width inches}}{33000}$

" double belt = $\frac{\text{ft. P.M.} \times 80 \times \text{width inches}}{33000}$

Horse power belt.

Millwright

H.P. single = $\frac{\text{ft./min.} \times \text{inches width}}{1000}$

" double = $\frac{\text{ft./min.} \times \text{inches width}}{560}$

Compound gears (very fancy)

1. Helical with a few worms and a couple of snakes.

RIGHT

Length of belt!

267

269